DOCUMENT DATA FORM **Your Name: Nick Carin**

Document Title or Description (max. 254 characters): Circle: Same as cover (or fill in below)

Drawing book 13 - Beam/Girder Connection Details, Bracing

Include work order no. and floor no. if applicable

Roll # DB02	**Doc. ID (report #, dwg. #):**

Document Date: 1972-73	**Document Author Name:**	**Author Organization:** SHCR

KEYWORDS – HIGHLIGHT ALL THAT APPLY

Level 1

Bankers Trust	Project 4	WTC 1 - North Tower	Add
Below Grade	Project 5	WTC 2 - South Tower	
Concourse	Project 6	WTC 3 - Marriot Hotel	
Electrical Substation	Project 7	WTC 4 - South Plaza Bldg.	
Liberty Plaza	Project 8	WTC 5 - North Plaza Bldg	
PATH Station	WFC 1 - Oppenhiemer Dow	WTC 6 - Customs House	
PATH Terminal	WFC 2 - Tower B	WTC 7	
Project 1	WFC 3 - American Express	WTC Complex	
Project 2	WFC 4 - Tower D	WTC Plaza	
Project 3			

Level 2

Accident analysis & risk	Fire protection	Misc. Performance Problems	Structural
Architectural	Fire service	News coverage	Tenant alterations
Data request	Landscaping	Police	Tenant Space
Emergency management	Management	Security	Add
Evacuation	Mech./elec.		

Level 3

1993 explosion	Cranes	Frame	Roof	Weight
A/E fitout	Criteria	Frame analysis	Safety	Weld detail
A-242	Dampers	Frequency	Schedule	Weld size
A-36	Debris	Fuel	Sculpture	Welding
A-497	Deck	Furniture layout	Security system	Wind
Aircraft impact	Deflection	Generators	Shear knuckle	Windows
Air cooled condensers	Demolition	Guidelines	Shear test	Yield strength
Analysis	Design	Gypsum board	Shear Stud	Add
Angles	Detailing	Hat truss	Shop drawings	Drawing books
Antenna	Doors	Human comfort	Shortening	
Artifacts	Drawings	HVAC	Slab	
Asbestos	Eastern States Steel	Index	Slurry wall	
Base plate	Egress	Inspection	Smoke control	
Beams	Elevator	Insulation	Smoke test	
Bid documents	Elevator Shaft	Job number	Spandrel beam	
Bid Invitation	Emergency communications	Joist	Specifications	
Bow tie	Equipment	L-50	Splices	
Bracing	Erection marks	Lighting	Sprinkler	
Bridging truss	Errors & Omissions	Loads	Stability	
Building code	Escalator	Maintenance	Stairways	
Calculations	Expansion joint	Marking	Standards	
Carpet	Exterior columns	Mesh reinforcement	Steel	
Ceilings	Fabrication	Mill inspection	Steel composition	
Certification	Family member	Model	Stiffness	
Chillers	Field survey	Mullion	Structural review	
Cladding	Fire alarms	Operations	Surveillance	
Collapse	Fireproofing	Paint	Survey	
Columns	Fire spread	Partition layout	Survivor	
Communication systems	Fire testing	Partitions	Tenant list	
Composite truss	Firetower	Photos	Tenant occupancy	
Computer output	Flag Pole	Pipes	Testing	
Computer program	Flammability	Plumbing	Tie	
Concrete	Floor	Prestressing	Tolerances	
Connections	Floor load	Probability, uncertainty	Transfer Girders	
Construction	Floor slab	Quality control	Triad	
Contract	Floor system	Ramp	Truss	
Core beams	Floor trusses	Reinforcing (strengthening)	Vestibule	
Core columns	Formwork	Renovation	Vibration	
Corrosion	Foundations	Repair	Walls	
Cracking	Fracture	Research & Development	Water supply	
			Weather	

WTCI-1043-LERA

BOOK (13)

COLUMN ELEVATION
BEAM CONN.
GIRDER DETAIL
BRACING

SKILLING, HELLE, CHRISTIANSEN, ROBERTSON — Structural & Civil Engineers

PROJECT: THE WORLD TRADE CENTER | TITLE: DRAWING BOOK 13 - DATE PAGE | DATE: 11/ 3/72

REVISIONS
5-6-73
5-7-73
6-4-73

13- K1.1- 1	5/ 7/73
13- K1.1- 2	6/ 4/73
13- K1.1- 3	6/ 4/73
13- K1.2- 1	12/11/72
13- K1.3- 1	11/20/72
13- K1.3- 2	2/28/73
13- K1.4- 1	11/20/72
13- K1.5- 1	12/11/72
13- K2.1- 1	4/ 2/73
13- K2.1- 2	2/ 5/73
13- K2.1- 3	2/ 5/73
13- K2.1- 4	12/11/72
13- K2.1- 5	11/20/72
13- K2.1- 6	4/20/73
13- K2.1- 7	4/20/73
13- K2.1- 8	6/ 4/73
13- K2.1- 9	12/11/72
13- K2.1-10	4/20/73
13- K2.1-11	4/20/73
13- K2.1-12	4/20/73
13- K2.1-13	11/20/72
13- K2.1-14	12/11/72
13- K2.1-15	12/11/72
13- K2.2- 1	2/ 5/73
13- K2.2- 2	2/ 5/73
13- K2.2- 3	2/ 5/73
13- K2.2- 4	11/20/72
13- K2.2- 5	12/11/72
13- K2.3- 1	11/20/72
13- K2.3- 2	12/11/72
13- K2.3- 3	6/ 4/73
13- K2.4- 1	11/20/72
13- K2.4- 2	11/20/72
13- K2.4- 3	2/ 5/73
13- K2.4- 4	2/ 5/73
13- K2.4- 5	2/ 5/73
13- K2.4- 6	11/20/72
13- K2.4- 7	2/ 5/73
13- K2.4- 8	11/20/72
13- K2.4- 9.1	11/20/72
13- K2.4- 9.2	11/20/72
13- K2.4-10	11/20/72
13- K2.4-11	11/20/72
13- K2.4-12	11/20/72
13- K2.4-13	4/20/73
13- K2.4-14	4/20/73
13- K2.4-15	12/11/72
13- K2.4-16	4/20/73
13- K2.5- 1	11/20/72
13- K2.5- 2	11/20/72
13- K2.5- 3.1	11/20/72
13- K2.5- 3.2	11/20/72
13- K2.5- 4	11/20/72
13- K2.5- 5	4/20/73
13- K2.5- 6	4/20/73
13- K2.5- 7	11/20/72
13- K3.1- 1	11/20/72
13- K3.1- 2	12/11/72
13- K3.1- 3	12/11/72
13- K3.1- 4	11/20/72
13- K3.1- 5	12/11/72
13- K3.1- 6	6/ 4/73
13- K3.1- 7	6/ 4/73
13- K3.1- 8	12/11/72
13- K3.1- 9	6/ 4/73
13- K3.1-10	4/20/73
13- K3.1-11	11/20/72
13- K3.1-12	4/20/73
13- K3.2- 1	11/20/72
13- K3.3- 1	11/20/72
13- K3.3- 2	11/20/72
13- K3.3- 3	12/11/72
13- K3.3- 4	11/20/72
13- K3.3- 5	11/20/72
13- K3.3- 6	11/20/72
13- K3.3- 7	11/20/72
13- K3.3- 8	11/20/72
13- K3.3- 9	11/20/72
13- K3.3-10	11/20/72
13- K3.3-11	11/20/72
13- K3.3-12	6/ 4/73
13- K3.3-13	[illegible]
13- K3.3-14	6/ 4/73
13- K3.3-15	2/ 5/73
13- K3.3-16	11/20/72
13- K3.3-17	11/20/72
13- K3.4- 1	2/ 5/73
13- K3.4- 2	2/ 5/73
13- K3.4- 3	2/ 5/73
13- K3.4- 4	11/24/72
13- K3.4- 5.1	2/ 5/73
13- K3.4- 5.2	11/24/72
13- K3.4- 6	2/ 5/73
13- K3.4- 7	11/24/72
13- K3.4- 8	11/24/72
13- K3.4- 9	11/24/72
13- K3.4-10	6/ 4/73
13- K3.4-11	11/24/72
13- K3.4-12.1	11/24/72
13- K3.4-12.2	6/ 4/73
13- K3.5- 1	2/ 5/73
13- K3.5- 2	11/20/72

LICENSED PROFESSIONAL ENGINEER — LESLIE E. ROBERTSON — No. 54360 — STATE OF NEW YORK

13- K1.1-2

SKILLING, HELLE, CHRISTIANSEN, ROBERTSON — Structural & Civil Engineers

PROJECT: THE WORLD TRADE CENTER | TITLE: DRAWING BOOK 13 - DATE PAGE | DATE: 2/ 5/73

REVISIONS
11-24-72
12-11-72
2-5-73
5-7-73
6-4-73

13- K4.1- 1	6/ 4/73
13- K4.1- 2	6/ 4/73
13- K4.2- 1	6/ 4/73
13- K4.3- 1	11/24/72
13- K4.3- 2	11/24/72
13- K4.3- 3	11/20/72
13- K4.3- 4	11/20/72
13- K5.1- 1	11/24/72
13- K5.1- 2	11/24/72
13- K5.2- 1	4/20/73
13- K5.3- 1.1	11/24/72
13- K5.3- 1.2	11/24/72
13- K5.3- 1.3	2/ 5/73
[illegible]	[illegible]
13- K5.3- 3.1	11/24/72
13- K5.3- 3.2	4/20/73
13- K5.3- 4	11/24/72
13- K5.3- 5	11/24/72
13- K5.3- 6	11/24/72
13- K5.3- 7	11/24/72
13- K5.4- 1	11/24/72
13- K5.5- 1	11/24/72
13- K6.1- 1	11/20/72
13- K6.1- 2	11/20/72
13- K6.1- 3	11/20/72
13- K6.1- 4	11/20/72
13- K6.1- 5	4/20/73
13- K6.2- 1	11/20/72
13- K6.2- 2	11/20/72
13- K6.2- 3	11/20/72
13- K6.2- 4	2/ 5/73

13- K7.1- 1	2/ 5/73
13- K7.2- 1	11/20/72
13- K7.3- 1	11/20/72
13- K8.1- 1	11/24/72
13- K8.1- 2	11/24/72
13- K8.1- 3	6/ 4/73
13- K8.2- 1	2/ 5/73
13- K8.2- 2	2/ 5/73
13- K8.3- 1	2/ 5/73
13- K8.3- 2	11/24/72
13- K8.3- 3	11/24/72
[illegible]	[illegible]
13- K9.1- 2	4/20/73
13- K9.2- 1	11/20/72
13- K9.2- 2	4/20/73
13- K9.2- 3	11/20/72
13- K9.2- 4	11/20/72
13- K10.1-1	5/ 7/73
13- K10.1-2	3/15/73
13- K10.1-3	3/15/73
13- K10.1-4	3/15/73
13- K10.2-1	3/15/73
13- K10.2-2	3/15/73
13- K10.3-4	3/15/73

13- K11.1-1	5/ 7/73
13- K11.1-2	5/ 7/73
13- K11.1-3.1	5/ 7/73
13- K11.1-3.2	5/ 7/73
13- K11.1-3.3	5/ 7/73
13- K11.1-3.4	5/ 7/73
13- K11.1-4	5/ 7/73
13- K11.1-5.1	5/ 7/73
13- K11.1-5.2	5/ 7/73
13- K11.2-1	5/ 7/73
13- K11.2-2.1	5/ 7/73
13- K11.2-2.2	5/ 7/73
13- K11.2-2.3	5/ 7/73
13- K11.2-3.1	5/ 7/73
13- K11.2-3.2	5/ 7/73
13- K11.2-4.1	5/ 7/73
13- K11.2-4.2	5/ 7/73
13- K11.2-5.1	5/ 7/73
13- K11.2-5.2	5/ 7/73
13- K11.3-1	5/ 7/73
13- K11.3-2	5/ 7/73
13- K11.4-1	5/ 7/73
13- K11.4-2	5/ 7/73
13- K11.4-3	6/ 4/73
13- K12 -1	5/ 7/73
13- K12 -2	5/ 7/73
13- K13-1	1/12/73
13- K13-2	1/12/73
13- K13-3	1/12/73
13- K13-4	1/12/73

LICENSED PROFESSIONAL ENGINEER
LESLIE E. ROBERTSON
No 34360
UNIVERSITY OF THE STATE OF NEW YORK

SKILLING, HELLE, CHRISTIANSEN, ROBERTSON — Structural & Civil Engineers

PROJECT THE WORLD TRADE CENTER | TITLE DRAWING BOOK 13 - CONTENTS | DATE 11-3-72

REVISIONS

Released for construction 11/20/72

2-5-73

5-7-73

BOOK	CHAPTER	CONTENT
13	K1.1	CONTENTS & DATE PAGE
	K1.2	GENERAL NOTES
	K1.3	PIPE OPENINGS IN BEAMS
	K1.4	TYPICAL STUD DETAILS
	K1.5	EXISTING BEAMS TO BE REMOVED
13	K2.1	GIRDER & COLUMN ELEVATIONS
	K2.2	COLUMN BASE DETAILS
	K2.3	TYPICAL GIRDER DETAILS
	K2.4	GIRDER COLUMN DETAILS
	K2.5	GIRDER FUTURE COLUMN DETS.
13	K3.1	GIRDER ELEVATIONS
	K3.2	TYPICAL GIRDER DETAILS
	K3.3	GIRDER CONNECTION DETAILS
	K3.4	GIRDER DETS. AT FUTURE COLS.
	K3.5	BEAM CONNECTIONS AT GIRDERS
13	K4.1	BALLROOM GIRDER ELEVATIONS
	K4.2	BALLROOM GIRDER TYPICAL DETS.
	K4.3	BALLROOM GIRDER END CONN.
13	K5.1	CONNECTIONS AT COLUMN
	K5.2	CONNECTION AT CANTILEVER
	K5.3	CONNECTIONS AT CANOPY
	K5.4	GIRDERS AT CANOPY
	K5.5	CONNECTIONS FUTURE CANOPY
13	K6.1	SLIDE CONNECTIONS TOWER B
	K6.2	DETAILS AT STAIR
13	K7.1	BEAM CONN. AT EXISTING
	K7.2	BEAM END NOTCHES
	K7.3	BEAM NOTCHES EXISTING
13	K8.1	HANGER DETS. ABOVE MECH. PLATFORM
	K8.2	HANGER DETS MECH. PLATFORM
	K8.3	DETAILS INTERMEDIATE LEVEL
13	K9.1	BRACING 310-332 ELEVATIONS
	K9.2	BRACING 310 332 DETAILS
13	K10.1	NOTCH & NEW SUPPORT FOR EXIST. BM.
	K10.2	SECTIONS AT ESCALATOR - EL 294
	K10.3	DETAIL AT COL HS/2 - EL. 284
13	K11.1	EL. 310, ZONE K3 — CONN. DET.
	K11.2	EL. 310, ZONE K5 — CONN. DET.
	K11.3	EL. 310, ZONE K3&5 - FIRE DAMAGE - C.D.
	K11.4	EL. 310/303, ZONE K5 - MECH. - C.D.
13	K12	EL. 329 ZONE K3 & K5 PLATFORM DET.
13	K13	SECTIONS AT AUTOLIFT - EL. 284.

LICENSED PROFESSIONAL ENGINEER — LESLIE E. ROBERTSON — No 34360 — UNIVERSITY OF THE STATE OF NEW YORK

DESIGNED

DRAWN

REVIEWED

SKILLING, HELLE, CHRISTIANSEN, ROBERTSON — Structural & Civil Engineers

PROJECT THE WORLD TRADE CENTER | TITLE DRAWING BOOK 13 - GENERAL NOTES | DATE 11-3-72

REVISIONS

Released for construction 11/20/72

12/11/72

GENERAL NOTES

The following provisions apply to all Drawing Book 13 drawings, unless specifically shown as noted otherwise in Drawing Book 13 drawings or in the plans.

A. Specification

1. All material, fabrication and erection shall be in accordance with Basic Project Specifications.

B. Dimensions

1. Contractor will be furnished field measurement for existing column locations and splice elevations prior to submitting mill orders.
2. Shop Drawings must indicate these field measurements prior to approval.
3. Columns shall be installed vertical above existing columns, with girder lengths adjusted to fit; however, detail material for future columns shall be installed in its theoretical location.

C. Materials

1. All steel sections, plates, detail materials and other members shall be ASTM A36, unless specifically shown otherwise.
2. Members indicated in the Drwings as "tube" are rectangular seamless structural tubing and shall conform to ASTM A501.

D. Bolted Connections

1. All bolted connections shall be high strength friction type, except where specifically noted as A307, or A490X (Bearing Type with threads excluded in shear plane).
2. A minimum of 2-3/4" Ø bolts shall be used at each member connected except where specifically noted in the Drawings.

E. Welded Connections

1. All manual welded electrodes shall be E70XX low hydrogen type.
2. All submerged arc welding shall be Grade SAW-2.
3. Studs shall be applied using a stud welding system providing a minimum current of 2000 amperes.
4. Where the symbols ⟋⟍ ⟋—⟨CP are shown in the drawings the fabricator shall provide a complete penetration weld. The fabricator may provide single or double bevel, V, U or J groove welds conforming to approved welding procedure specifications.

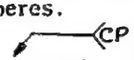

F. Erection Sequence

1. Contractor of two way girder connections require sequence erection of girders including shoring of one end prior to installing perpendicular supporting girder; therefore, Contractor to submit Erection Sequence and shoring to the Engineer for approval.

F. Miscellaneous

1. Specific details and notes shall prevail over general details and notes.

   Any conflict or apparent conflict between drawings and/or notes shall be submitted to the Engineer for his decision before construction or preparation of shop drawings has begun.
2. Section/details indicated 3.3-10E means Section/Detail E in Drawing Book 13 page 13-K3.3-10.
3. Page numbers in Drawing Book 13 which include more than one page are numbered 2.1, 2.2, 2.3, etc. Page numbers which include only one page are numbered 2 with no decimal. Where reference is made to page numbers with more than one page, the decimal portion of the page number is not included. Therefore, a section or detail indicated 3-2 may be 13-K3-2.1, 2.3, etc.

G. Finishing

1. Compression joints depending upon contact bearing are indicated thus ⟋⟍ in the drawings.
2. Where surfaces are finished by milling, plate thickness shown in the Drawings shall be reduced a maximum of 1/8 inch for plates up to and including 2 inches thick, a maximum of 1/4 inch for plates over 2 inches thick, except that plates indicated thus (1.2-1G) in the Drawings shall be increased in thickness to allow for milling.
3. Top of Base Plates at future columns shall be at elevation shown in the Drawings, after erection. Base Plates shall be thickened as required for milling operation in order to achieve this elevation.
4. The surface of each girder flange in contact with a cap plate or base plate may be considered finished without further work where the following criteria is met: Contact bearing surfaces shall have at least 75% of the entire contact area in full bearing and the separation of the remaining portion shall not exceed [illegible] inch except adjacent to toes of flanges or corners of plates where a localized separation not exceeding 0.025 inch is permissible.

LICENSED PROFESSIONAL ENGINEER LESLIE E. ROBERTSON No 34360 UNIVERSITY OF THE STATE OF NEW YORK

DESIGNED

DRAWN

REVIEWED

13-K1.2-1

SKILLING, HELLE, CHRISTIANSEN, ROBERTSON — Structural & Civil Engineers

PROJECT THE WORLD TRADE CENTER | TITLE PIPE OPENINGS IN BEAMS | DATE 11-3-72

REVISIONS

Released for construction 11-20-72

A E

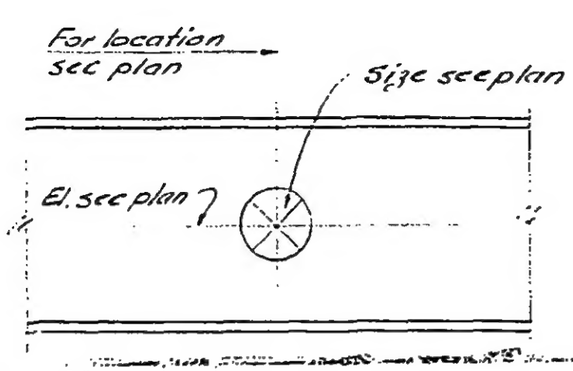

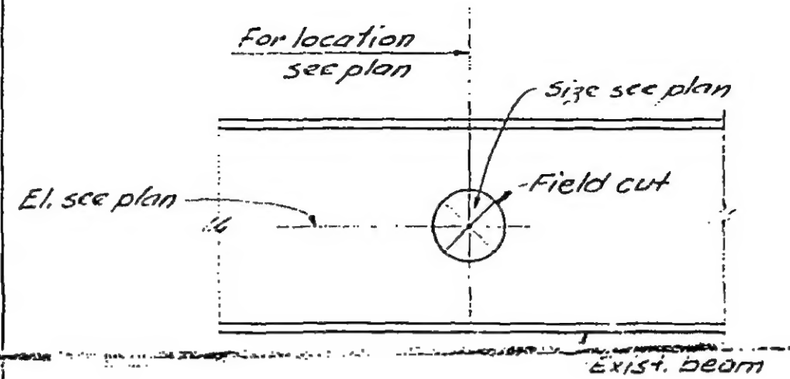

B F

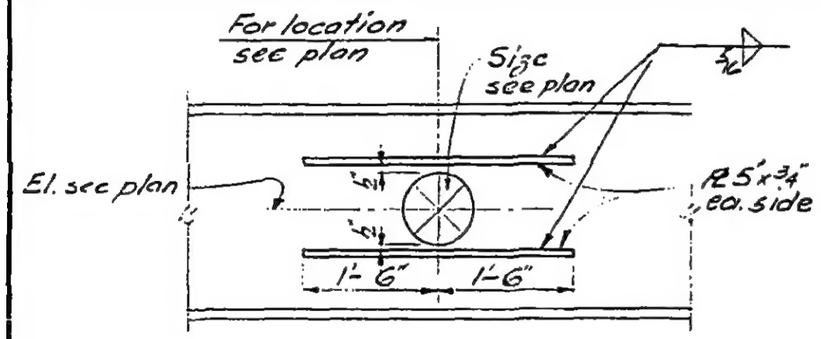

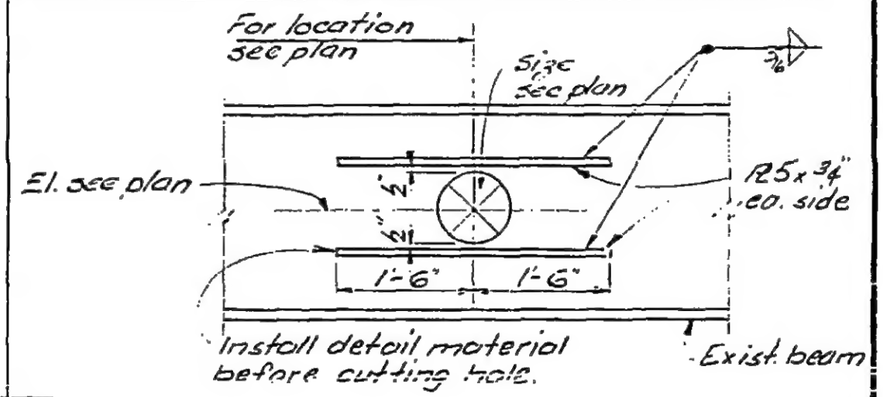

C G

D H

C as shown
D upside down

G as shown
H upside down

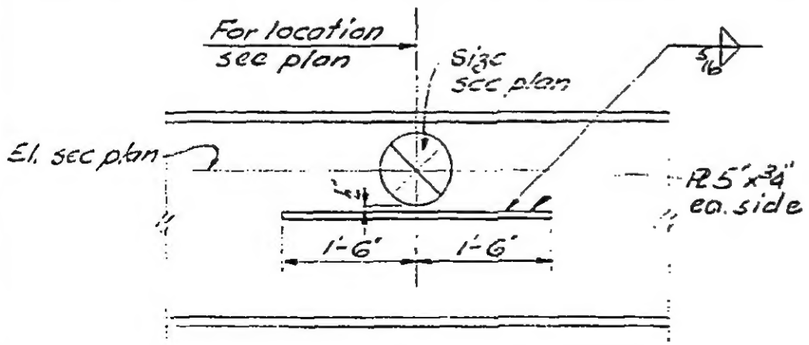

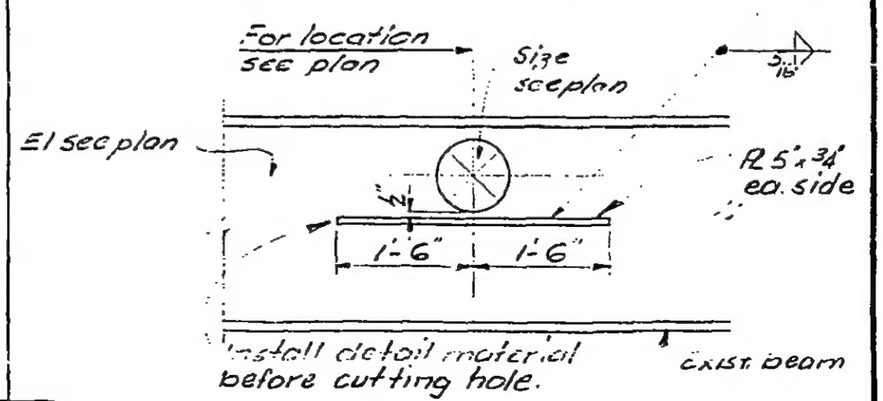

LICENSED PROFESSIONAL ENGINEER LESLIE E. ROBERTSON NO 34360 UNIVERSITY OF THE STATE OF NEW YORK

DESIGNED

DRAWN Palm Gracias

REVIEWED

13-K1.3-1

SKILLING, HELLE, CHRISTIANSEN, ROBERTSON — Structural & Civil Engineers

PROJECT THE WORLD TRADE CENTER | TITLE PIPE OPENINGS IN BEAMS | DATE 2-12-73

REVISIONS

2-26-73

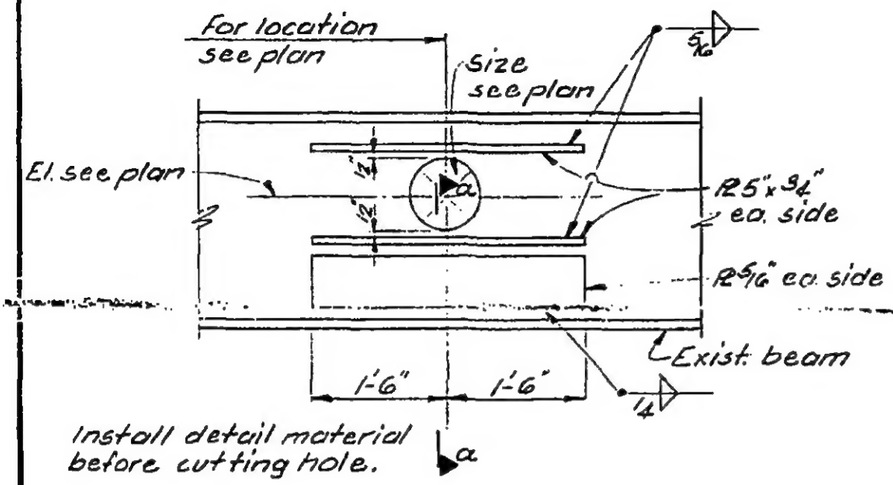

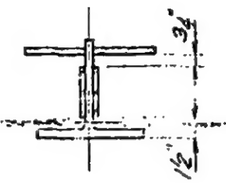

A | a

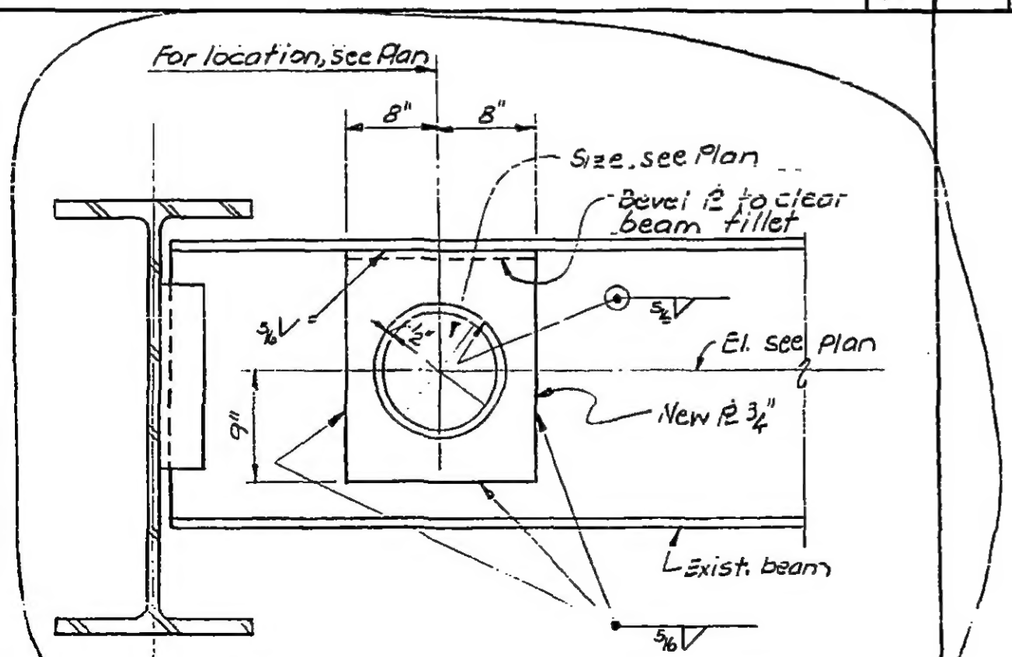

Note: Install & completely weld new R before cutting hole in exist. beam

B

DESIGNED

DRAWN T.R.

REVIEWED

13-K1.3-2

SKILLING, HELLE, CHRISTIANSEN, ROBERTSON — Structural & Civil Engineers

PROJECT: THE WORLD TRADE CENTER | TITLE: TYPICAL STUD DETAILS | DATE: 11-3-72

REVISIONS

Released for Construction 11-20-72

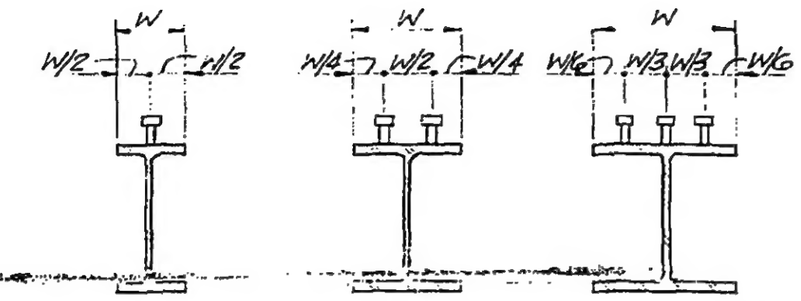

One Row WS 6 6s WS 9 (Note 4)

Two Rows (Note 4)

Three Rows (Note 5)

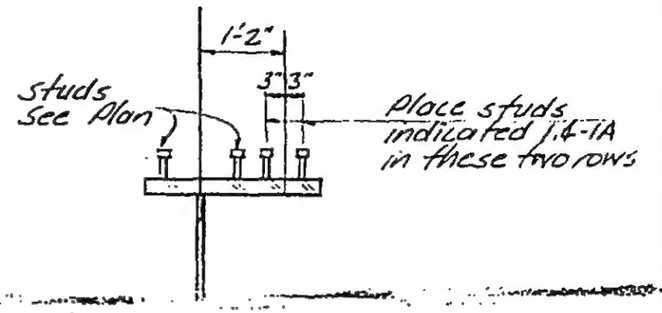

A

Notes:

3. All studs are $\frac{3}{4}$"ϕ x 0'-3" headed shear studs.
4. Use two rows for W=6" to W=9" where studs in a single row would otherwise be less than 4" o.c. Use two rows for W=9" or more where studs in one row would otherwise be less than 4" o.c.
5. Use three rows for W=9" or more where studs in two rows would otherwise be less than 4" o.c.

LICENSED PROFESSIONAL ENGINEER — LESLIE E. ROBERTSON — No 34360 — UNIVERSITY OF THE STATE OF NEW YORK

DESIGNED

DRAWN T.R.

REVIEWED

13-K1.4-1

SKILLING, HELLE, CHRISTIANSEN, ROBERTSON — Structural & Civil Engineers

PROJECT: THE WORLD TRADE CENTER | TITLE: PART PLAN-EXISTING BEAMS TO BE REMOVED | DATE: 11-20-72

REVISIONS

RELEASED FOR CONSTRUCTION 11-20-72

12-11-72

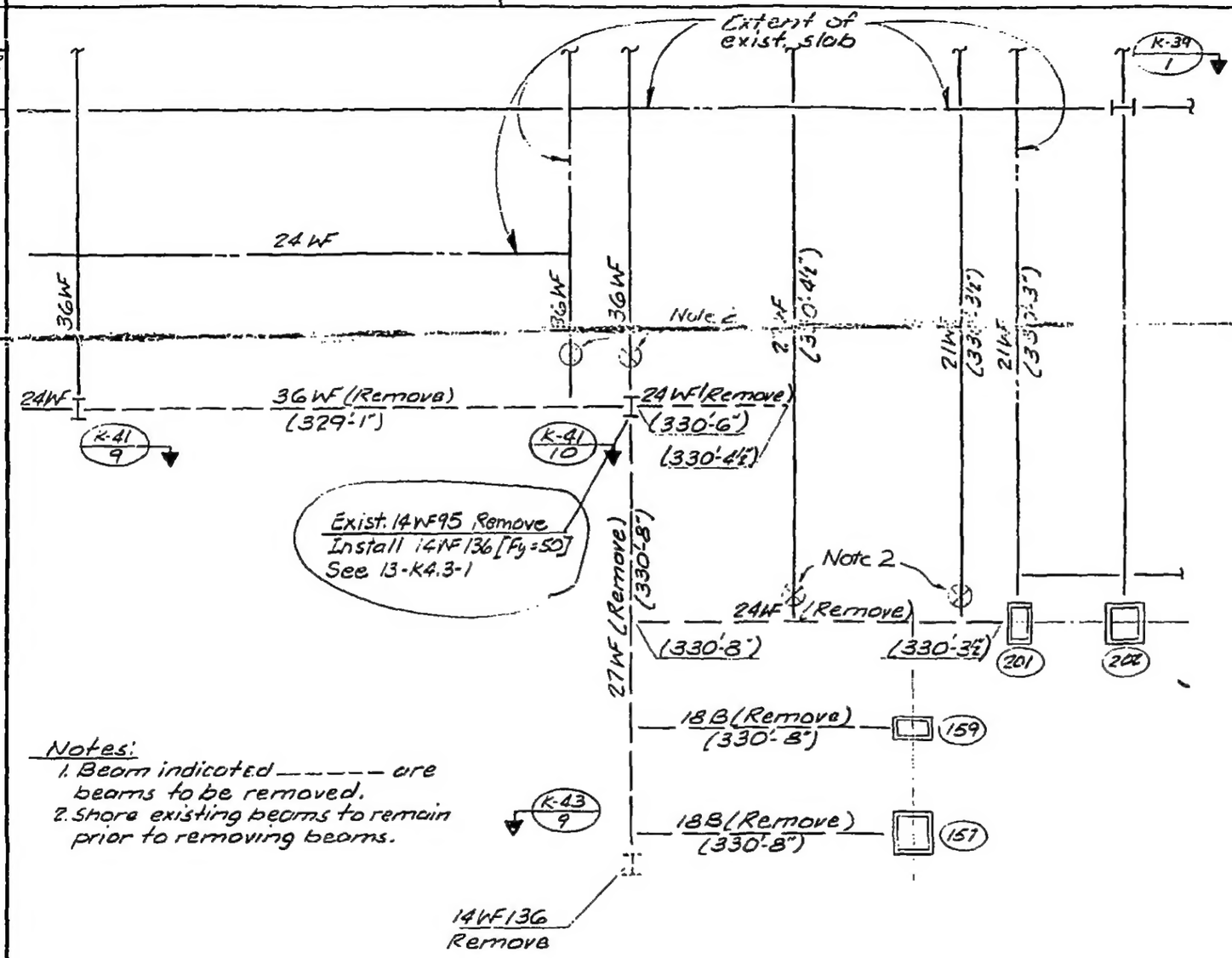

Notes:
1. Beam indicated ------ are beams to be removed.
2. Shore existing beams to remain prior to removing beams.

Part Plan at El. 332'-0"

LICENSED PROFESSIONAL ENGINEER — LESLIE E. ROBERTSON — No. 34360 — UNIVERSITY OF THE STATE OF NEW YORK

DESIGNED

DRAWN TK

REVIEWED

13-K1.5-1

SKILLING, HELLE, CHRISTIANSEN, ROBERTSON — Structural & Civil Engineers

PROJECT: THE WORLD TRADE CENTER | TITLE: GIRDER ELEVATION LINE 31 | DATE: 11-3-72

REVISIONS

RELEASE FOR CONSTRUCTION 11-20-72

2-5-73

4-2-73

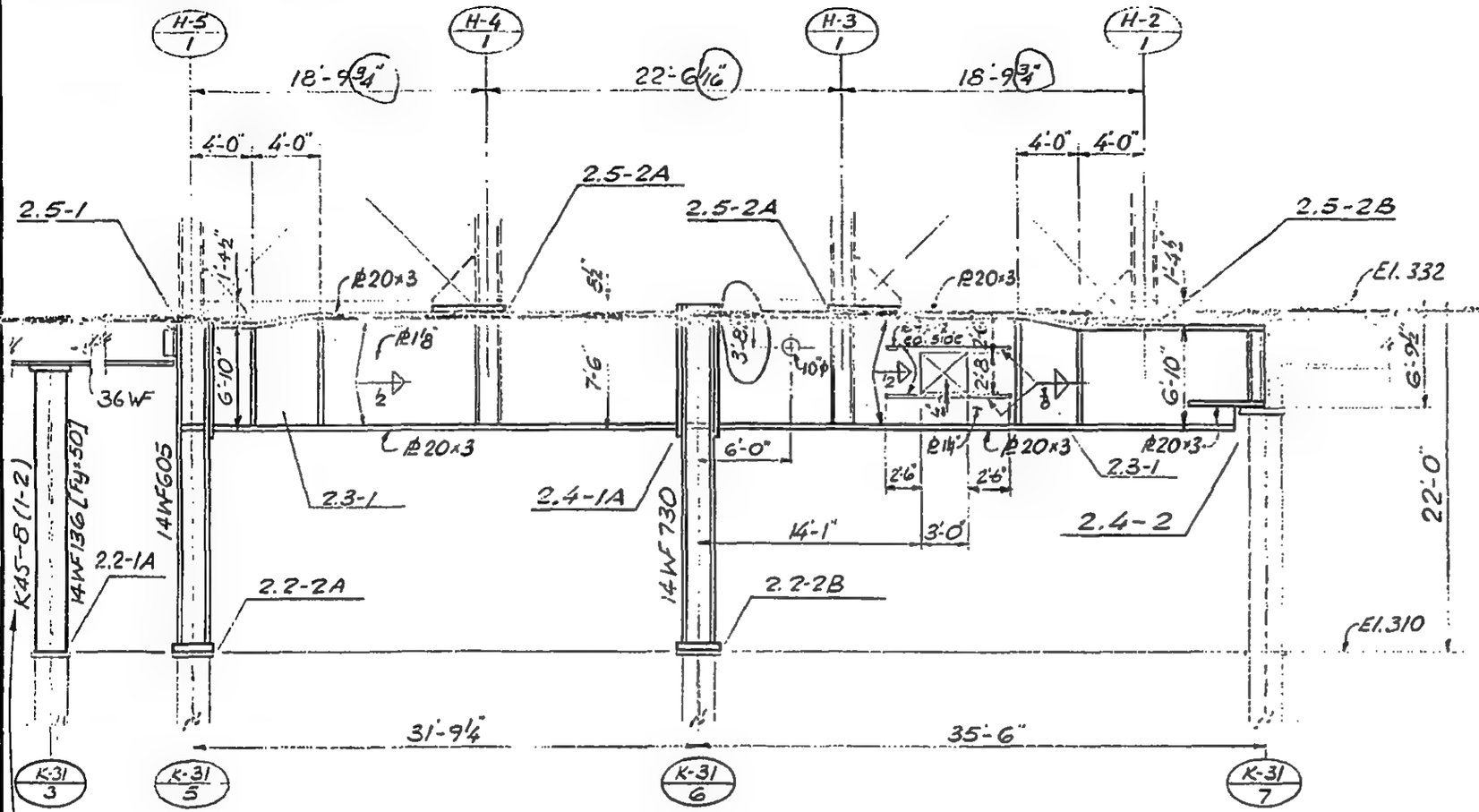

Note

Cols. designated with K X X-X(X-X) are as fabricated. Columns to be reworked as req'd and used in locations indicated.

LICENSED PROFESSIONAL ENGINEER — LESLIE E. ROBERTSON — No 34360 — UNIVERSITY OF THE STATE OF NEW YORK

DESIGNED

DRAWN

REVIEWED

13-K2.1-1

SKILLING, HELLE, CHRISTIANSEN, ROBERTSON — Structural & Civil Engineers

PROJECT: THE WORLD TRADE CENTER | TITLE: GIRDER ELEVATION LINE 35 | DATE: 11-3-72

REVISIONS

RELEASE FOR CONSTRUCTION 11-20-72

12-11-72

2-5-73

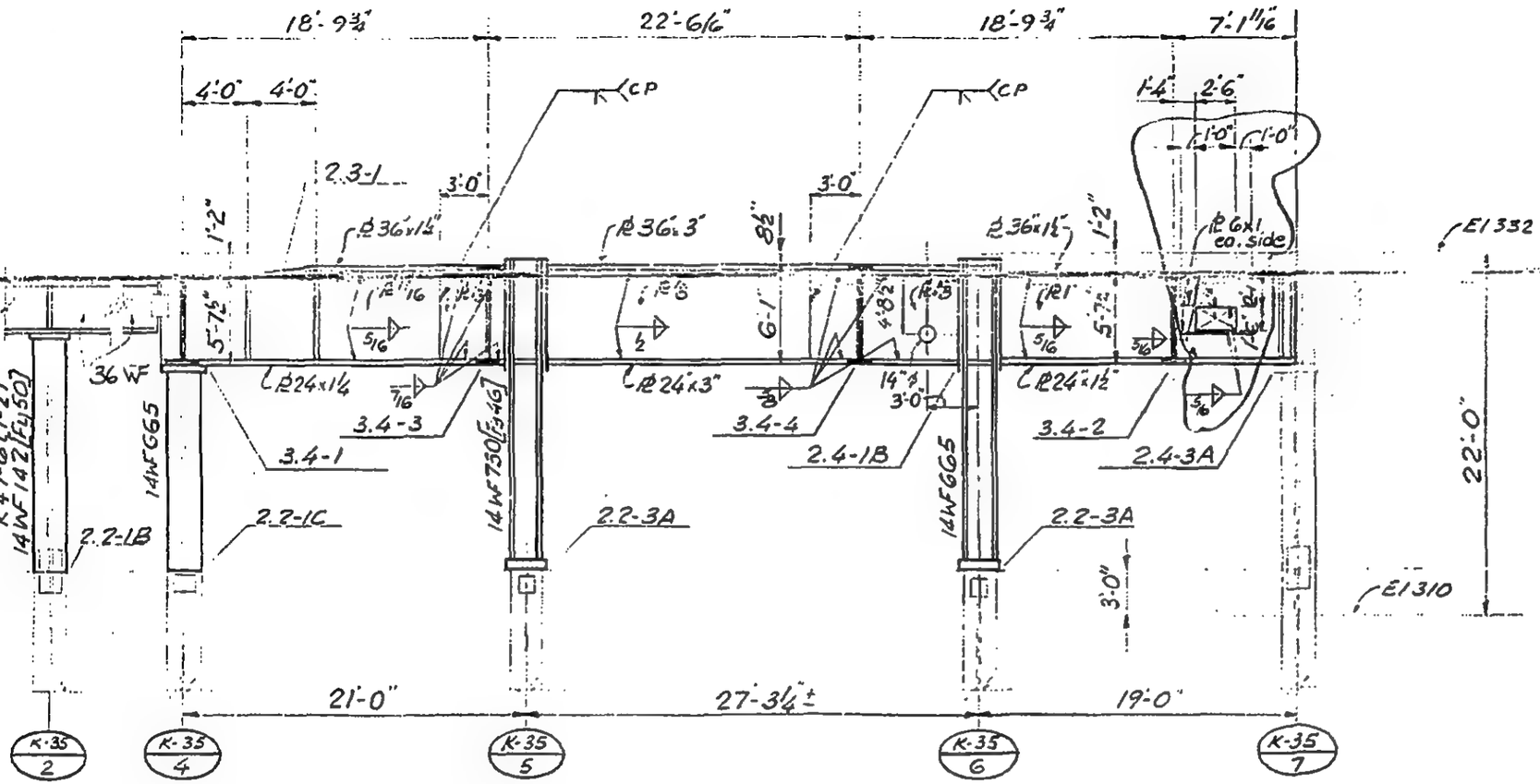

LICENSED PROFESSIONAL ENGINEER
LESLIE E. ROBERTSON
No 34360
UNIVERSITY OF THE STATE OF NEW YORK

DESIGNED

DRAWN John Guerrero

REVIEWED

13-K2.1-2

SKILLING, HELLE, CHRISTIANSEN, ROBERTSON — Structural & Civil Engineers

PROJECT THE WORLD TRADE CENTER | TITLE GIRDER ELEVATION LINE 37 | DATE 11-3-72

REVISIONS

RELEASE FOR CONSTRUCTION 11-20-72

12-11-72

2-5-73

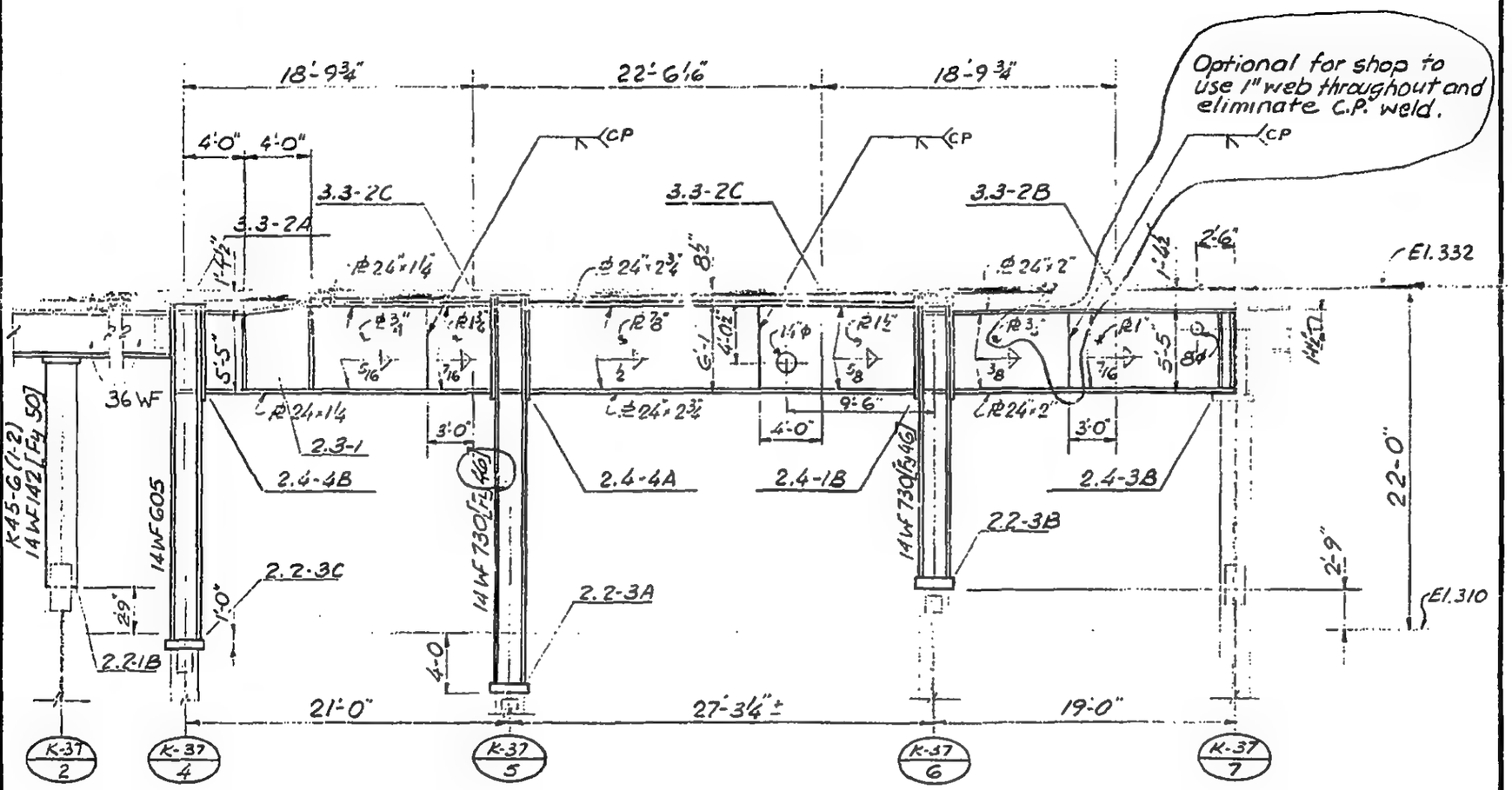

LICENSED PROFESSIONAL ENGINEER — LESLIE E. ROBERTSON — No 34360 — UNIVERSITY OF THE STATE OF NEW YORK

DESIGNED

DRAWN John Gracias

REVIEWED

13-K2.1-3

SKILLING, HELLE, CHRISTIANSEN, ROBERTSON — Structural & Civil Engineers

PROJECT: THE WORLD TRADE CENTER | TITLE: GIRDER ELEVATION LINE 41 | DATE: 11-3-72

REVISIONS

RELEASE FOR CONSTRUCTION 11-20-72

12-11-72

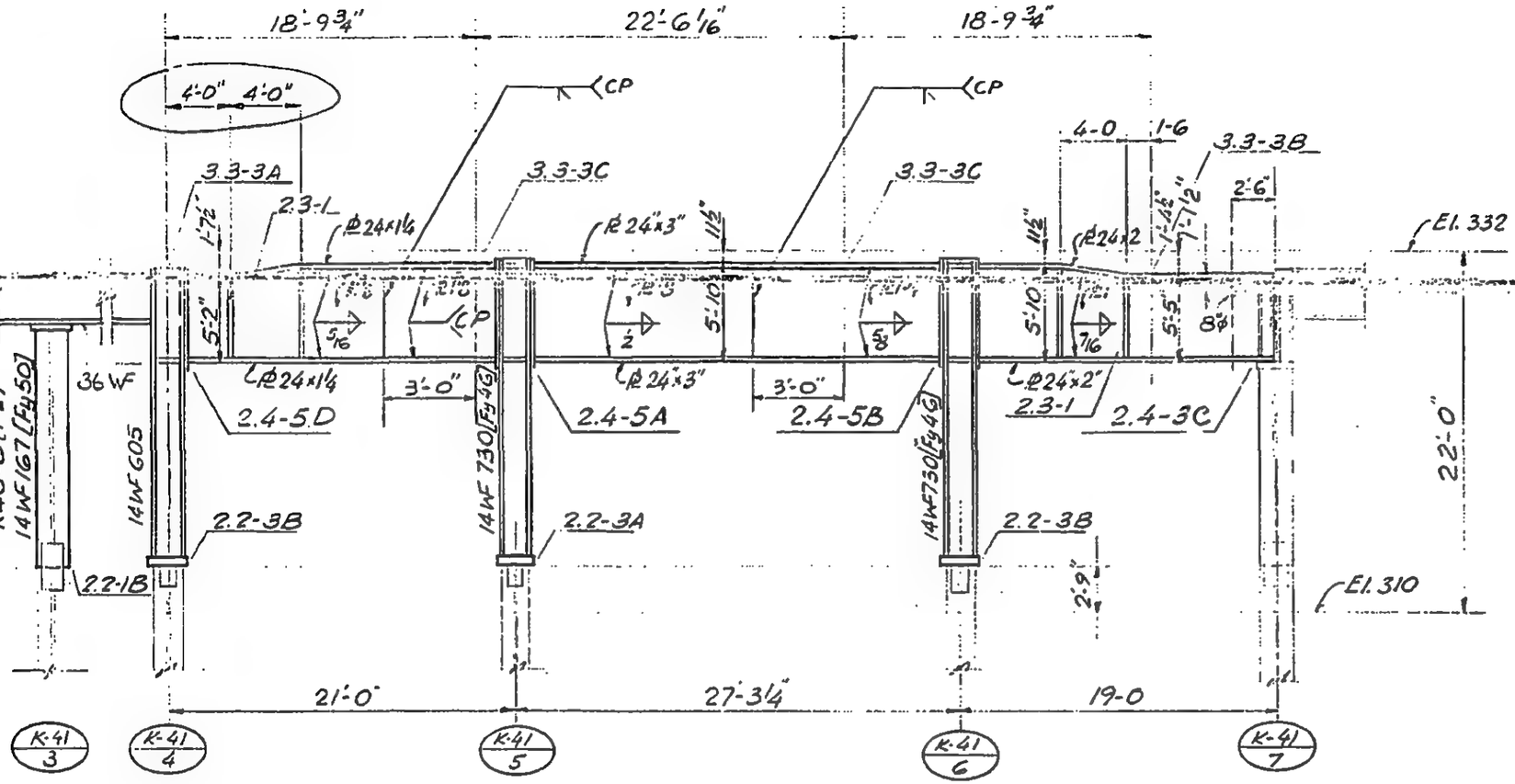

LICENSED PROFESSIONAL ENGINEER — LESLIE E. ROBERTSON — No 34360 — UNIVERSITY OF THE STATE OF NEW YORK

DESIGNED

DRAWN John Gilcannon

REVIEWED

13-K2.1-4

SKILLING, HELLE, CHRISTIANSEN, ROBERTSON — Structural & Civil Engineers

PROJECT: THE WORLD TRADE CENTER | TITLE: GIRDER ELEVATION LINE 43 | DATE: 11-3-72

REVISIONS

RELEASE FOR CONSTRUCTION 11-20-72

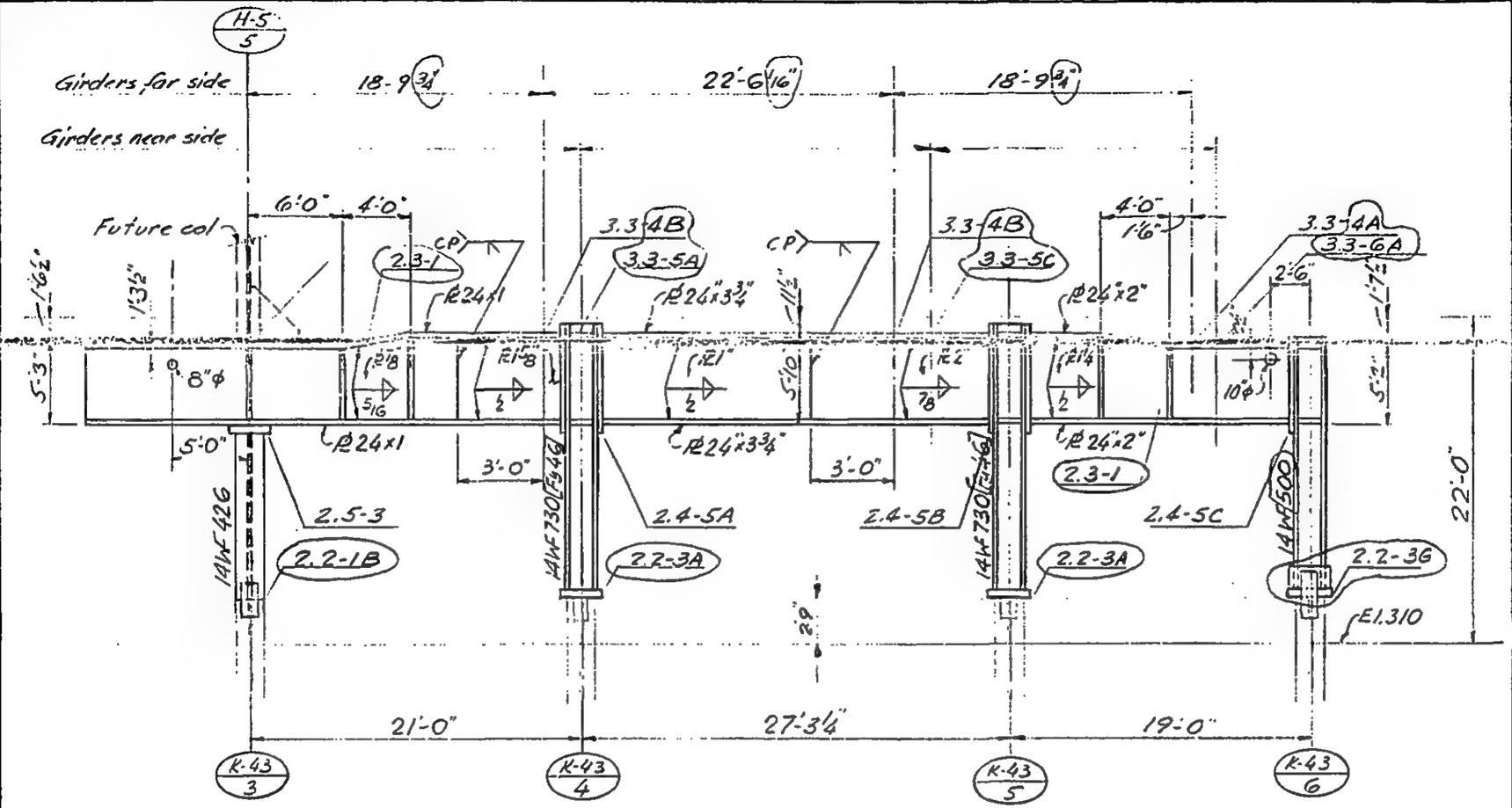

LICENSED PROFESSIONAL ENGINEER — LESLIE E. ROBERTSON — No 34360 — UNIVERSITY OF THE STATE OF NEW YORK

DESIGNED

DRAWN

REVIEWED

13-K2.1-5

SKILLING, HELLE, CHRISTIANSEN, ROBERTSON — Structural & Civil Engineers

PROJECT: THE WORLD TRADE CENTER | TITLE: GIRDER ELEVATION LINE 45 | DATE: 11-3-72

REVISIONS

- RELEASE FOR CONSTRUCTION 11-20-72
- 12-11-72
- 2-5-73
- 4-20-73

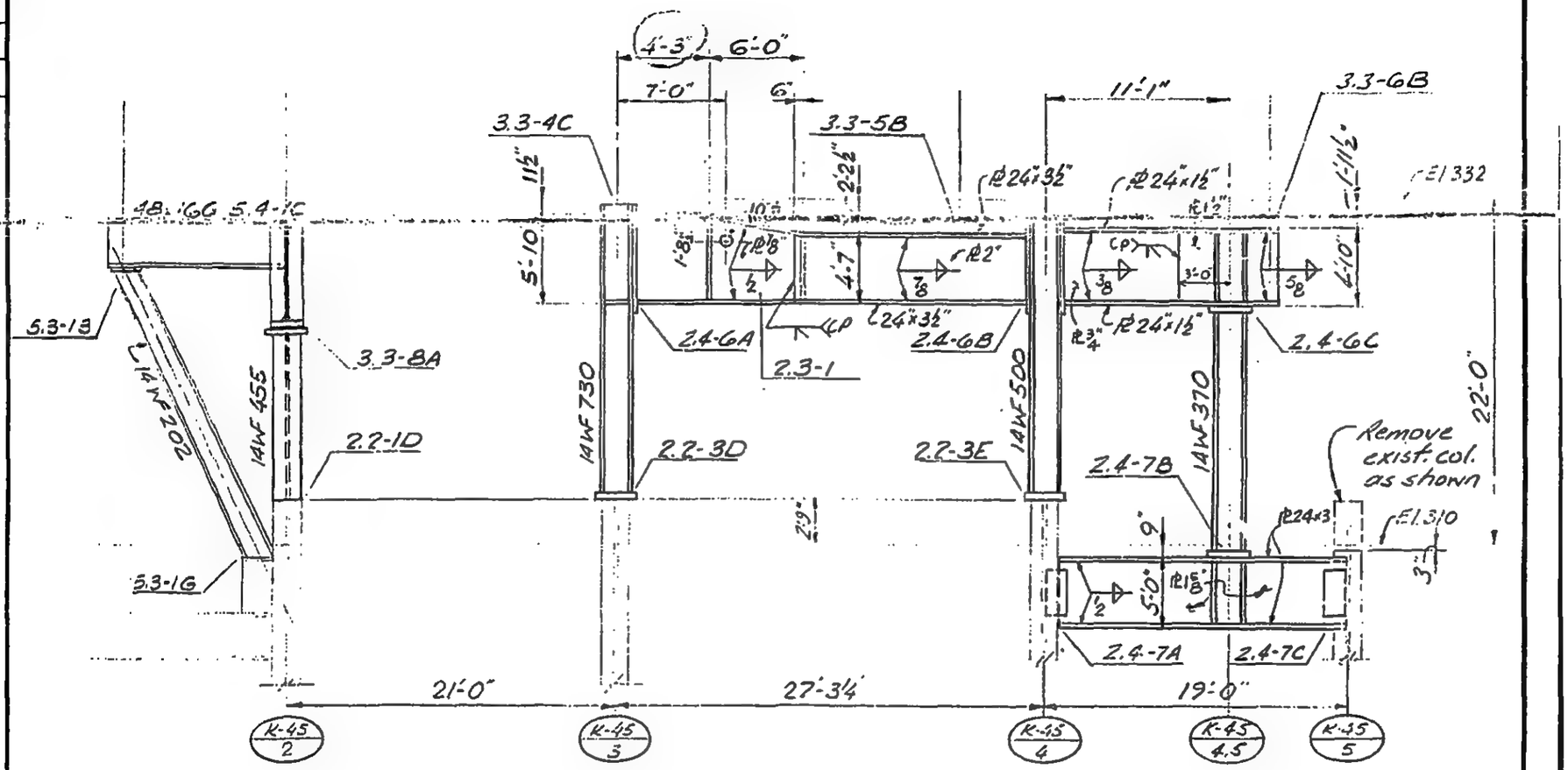

LICENSED PROFESSIONAL ENGINEER — LESLIE E. ROBERTSON — No 34360 — UNIVERSITY OF THE STATE OF NEW YORK

DESIGNED: K. Chiang

DRAWN: John Sweeney

REVIEWED:

13-K2.1-6

SKILLING, HELLE, CHRISTIANSEN, ROBERTSON — Structural & Civil Engineers

PROJECT: THE WORLD TRADE CENTER | TITLE: GIRDER ELEVATION LINE 47 | DATE: 11-3-72

REVISIONS

RELEASE FOR CONSTRUCTION 11-20-72

12-11-72

2-5-73

4-20-73

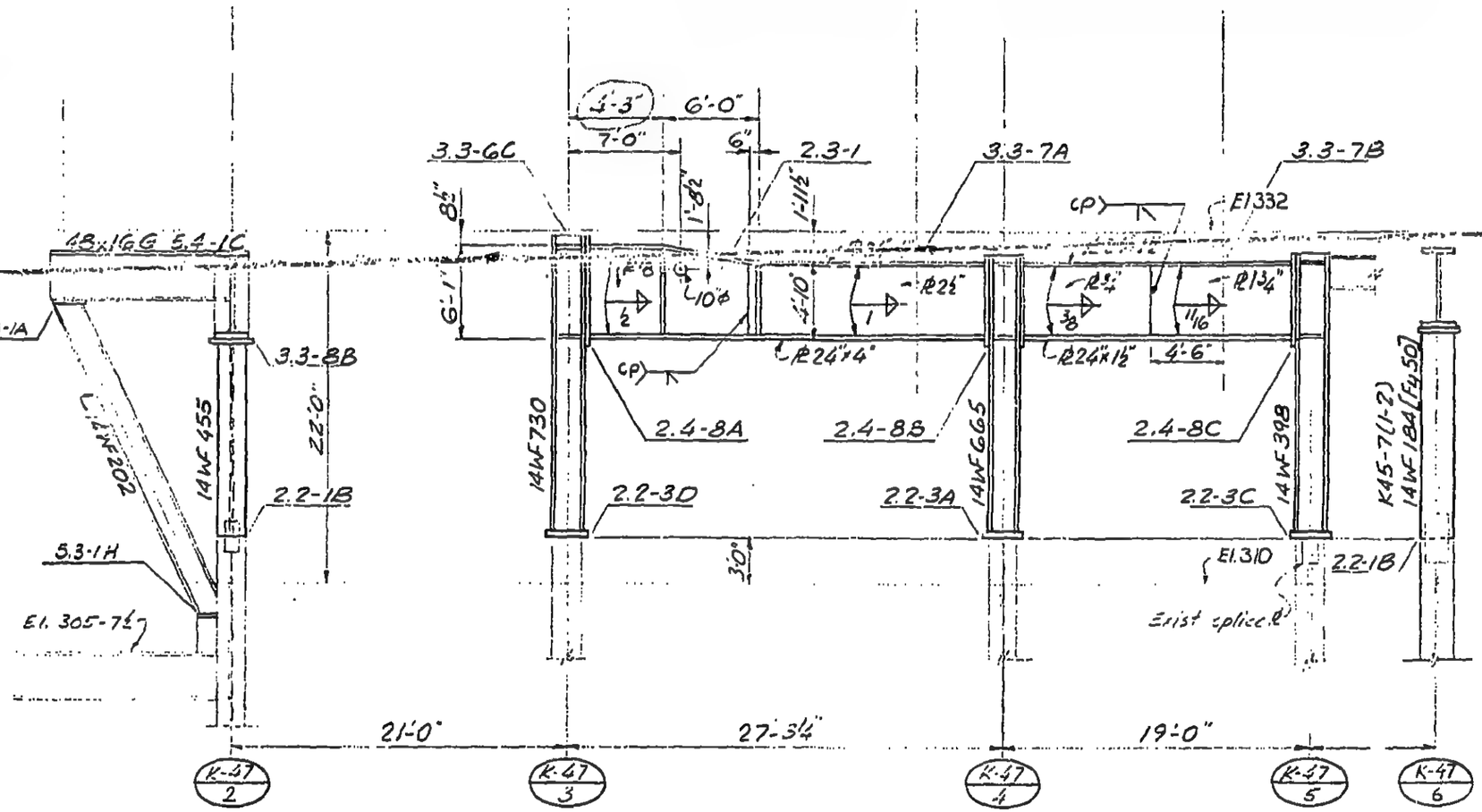

13-K 2.1-7

LICENSED PROFESSIONAL ENGINEER — LESLIE E. ROBERTSON — No 34360 — UNIVERSITY OF THE STATE OF NEW YORK

DESIGNED V. Chiang

DRAWN Tom Gracias

REVIEWED

SKILLING, HELLE, CHRISTIANSEN, ROBERTSON — Structural & Civil Engineers

PROJECT THE WORLD TRADE CENTER | TITLE GIRDER ELEVATION | DATE 11-3-72

REVISIONS

RELEASE FOR CONSTRUCTION 11-20-72

12-11-72

6-4-73

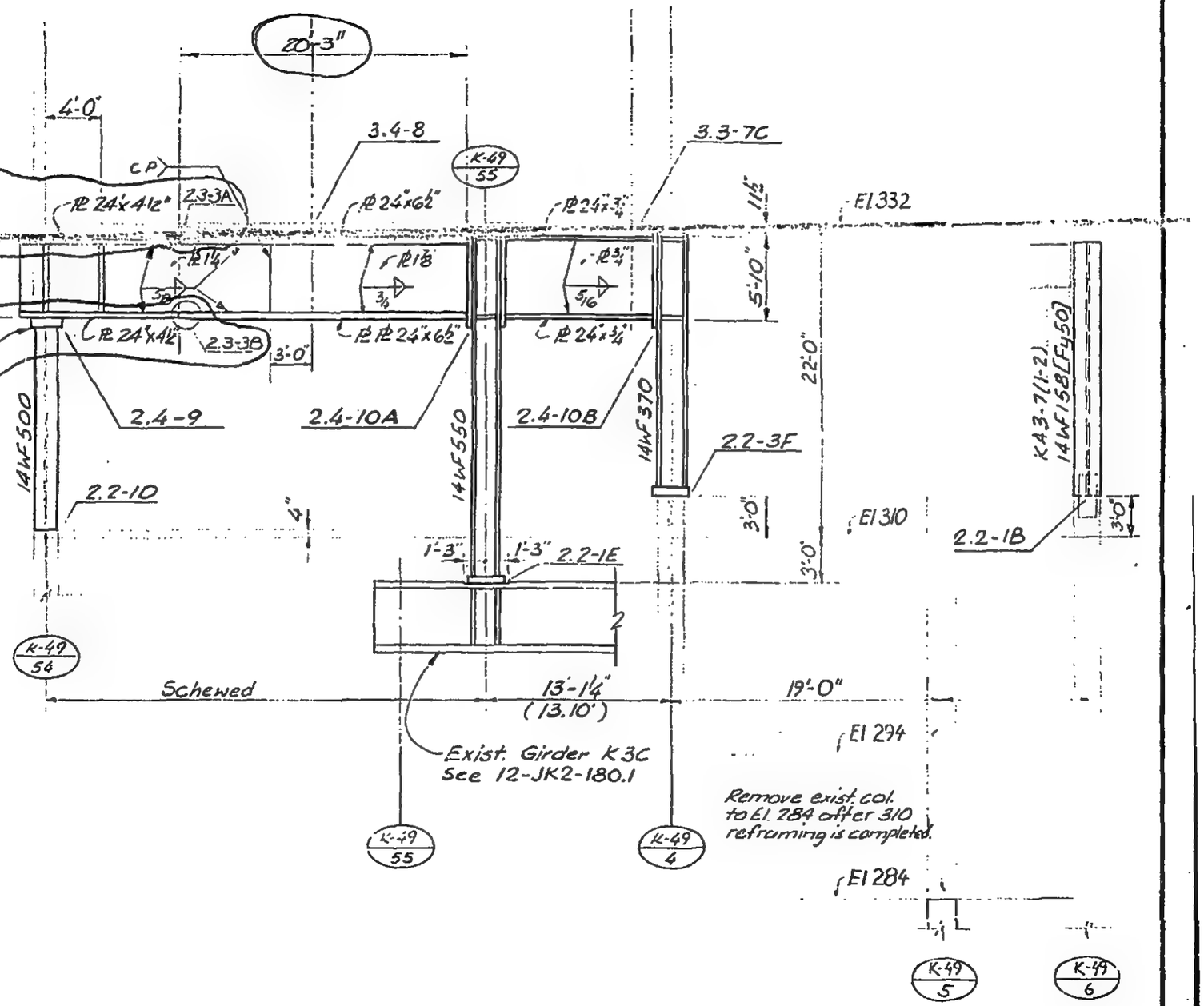

13-K2.1-8

LICENSED PROFESSIONAL ENGINEER — LESLIE E. ROBERTSON — No. 34380 — UNIVERSITY OF THE STATE OF NEW YORK

DESIGNED

DRAWN John Gricius

REVIEWED

SKILLING, HELLE, CHRISTIANSEN, ROBERTSON — Structural & Civil Engineers

PROJECT: THE WORLD TRADE CENTER | TITLE: GIRDER ELEVATION LINE 51 | DATE: 11-3-72

REVISIONS

RELEASE FOR CONSTRUCTION 11-20-72

12-11-72

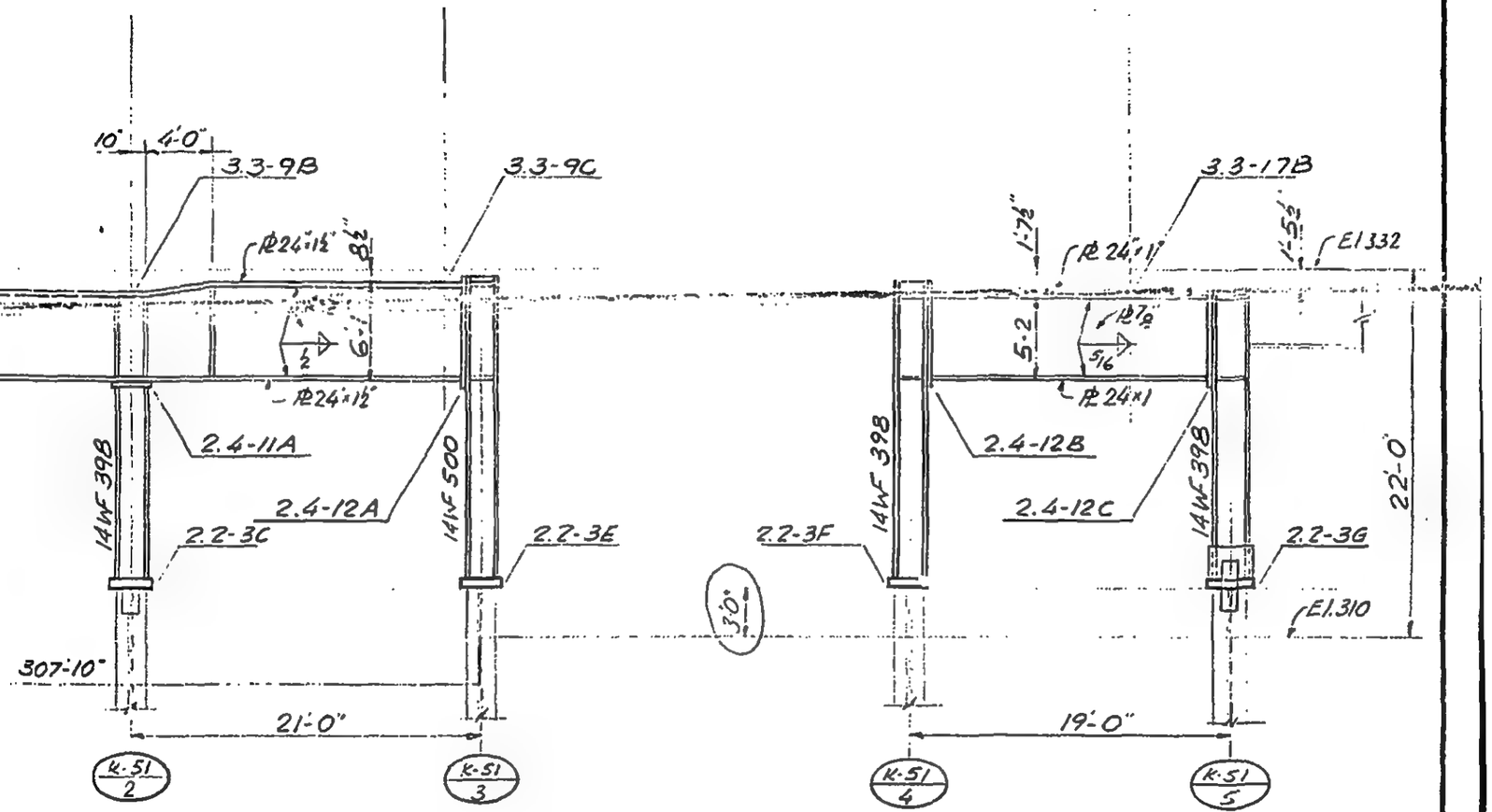

LICENSED PROFESSIONAL ENGINEER — LESLIE E. ROBERTSON — No 34360 — UNIVERSITY OF THE STATE OF NEW YORK

DESIGNED

DRAWN John Gnecco

REVIEWED

13-K2.1-9

SKILLING, HELLE, CHRISTIANSEN, ROBERTSON — Structural & Civil Engineers

PROJECT: THE WORLD TRADE CENTER | TITLE: GIRDER ELEVATION LINE 53 | DATE: 11-3-72

REVISIONS

RELEASE FOR CONSTRUCTION 11-20-72

12-11-72

4-20-73

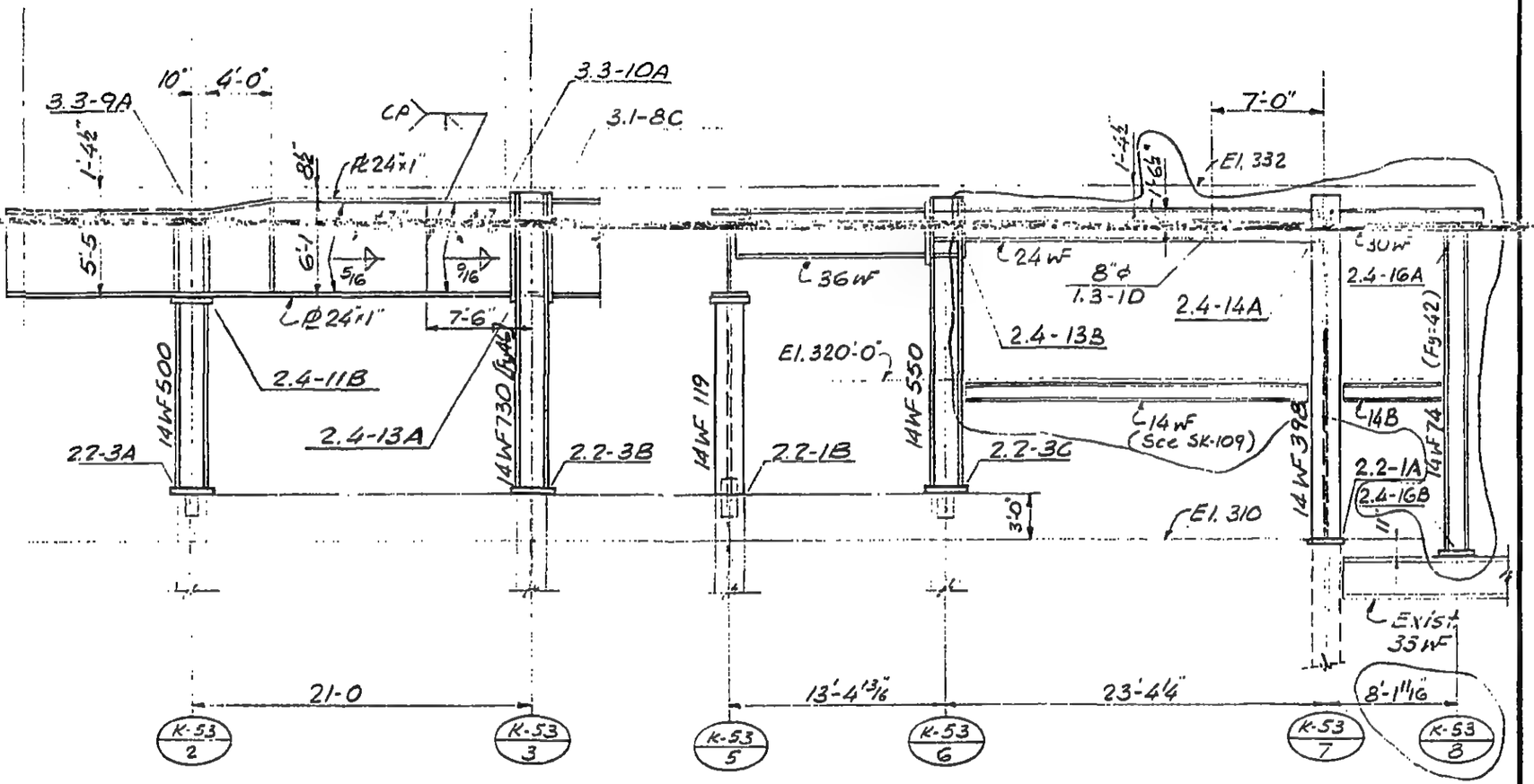

LICENSED PROFESSIONAL ENGINEER — LESLIE E. ROBERTSON — No 34360 — UNIVERSITY OF THE STATE OF NEW YORK

DESIGNED: K. Chiang

DRAWN: John Gricinas

REVIEWED:

13-K2.1-10

SKILLING, HELLE, CHRISTIANSEN, ROBERTSON — Structural & Civil Engineers

PROJECT: THE WORLD TRADE CENTER | TITLE: GIRDER ELEVATION LINE 55 | DATE: 11-3-72

REVISIONS

RELEASE FOR CONSTRUCTION 11-20-72

12-11-72

4-20-73

8-22-73

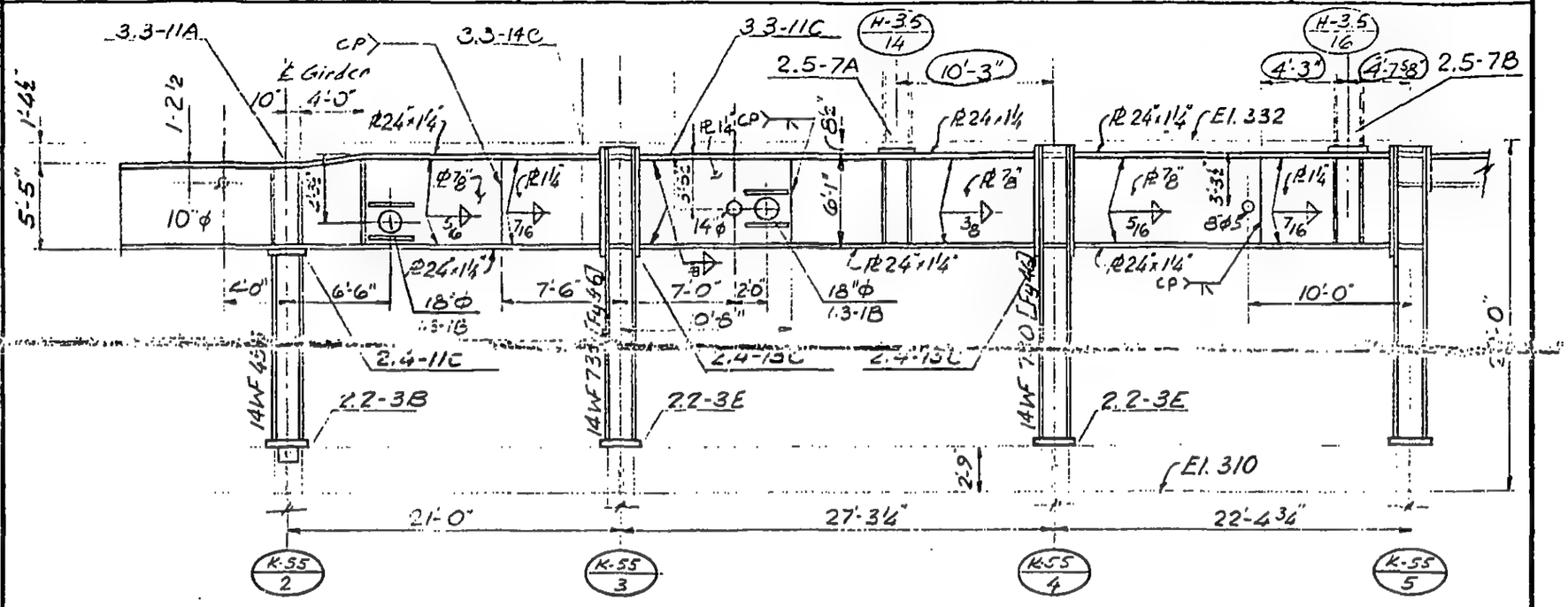

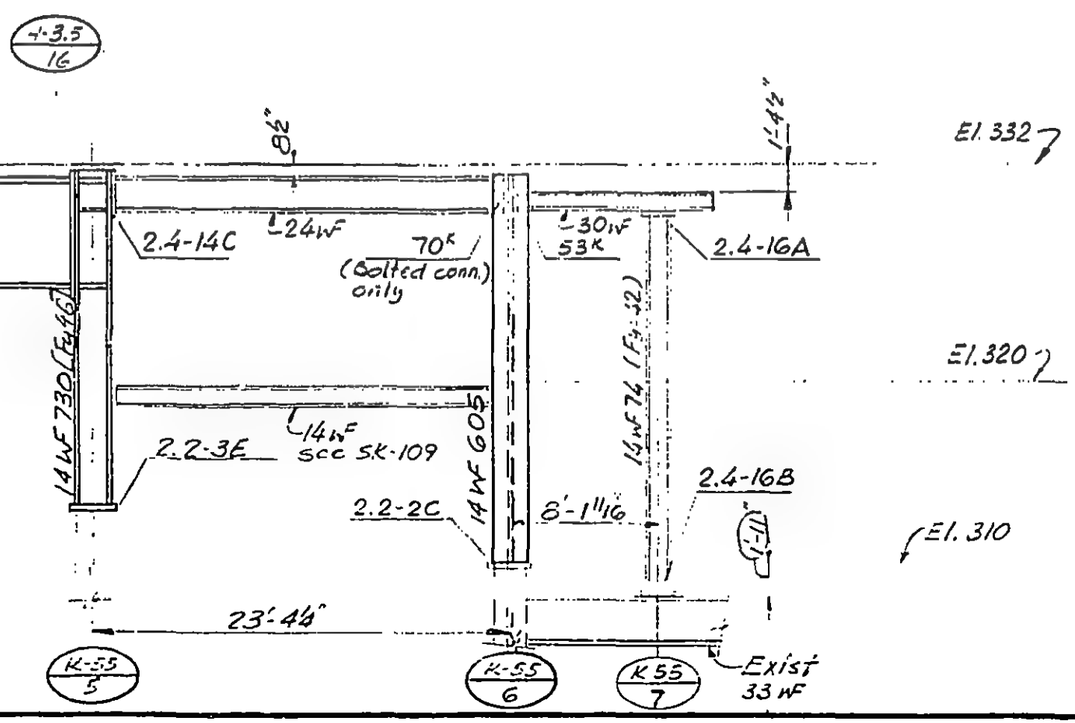

LICENSED PROFESSIONAL ENGINEER — LESLIE E. ROBERTSON — No 34360 — UNIVERSITY OF THE STATE OF NEW YORK

DESIGNED K. Chiang

DRAWN John Grieco

REVIEWED

13-K2.1-11

SKILLING, HELLE, CHRISTIANSEN, ROBERTSON — Structural & Civil Engineers

PROJECT: THE WORLD TRADE CENTER | TITLE: GIRDER ELEVATION LINE 57 | DATE: 11-3-72

REVISIONS

RELEASE FOR CONSTRUCTION 11-20-72

12-11-72

4-20-73

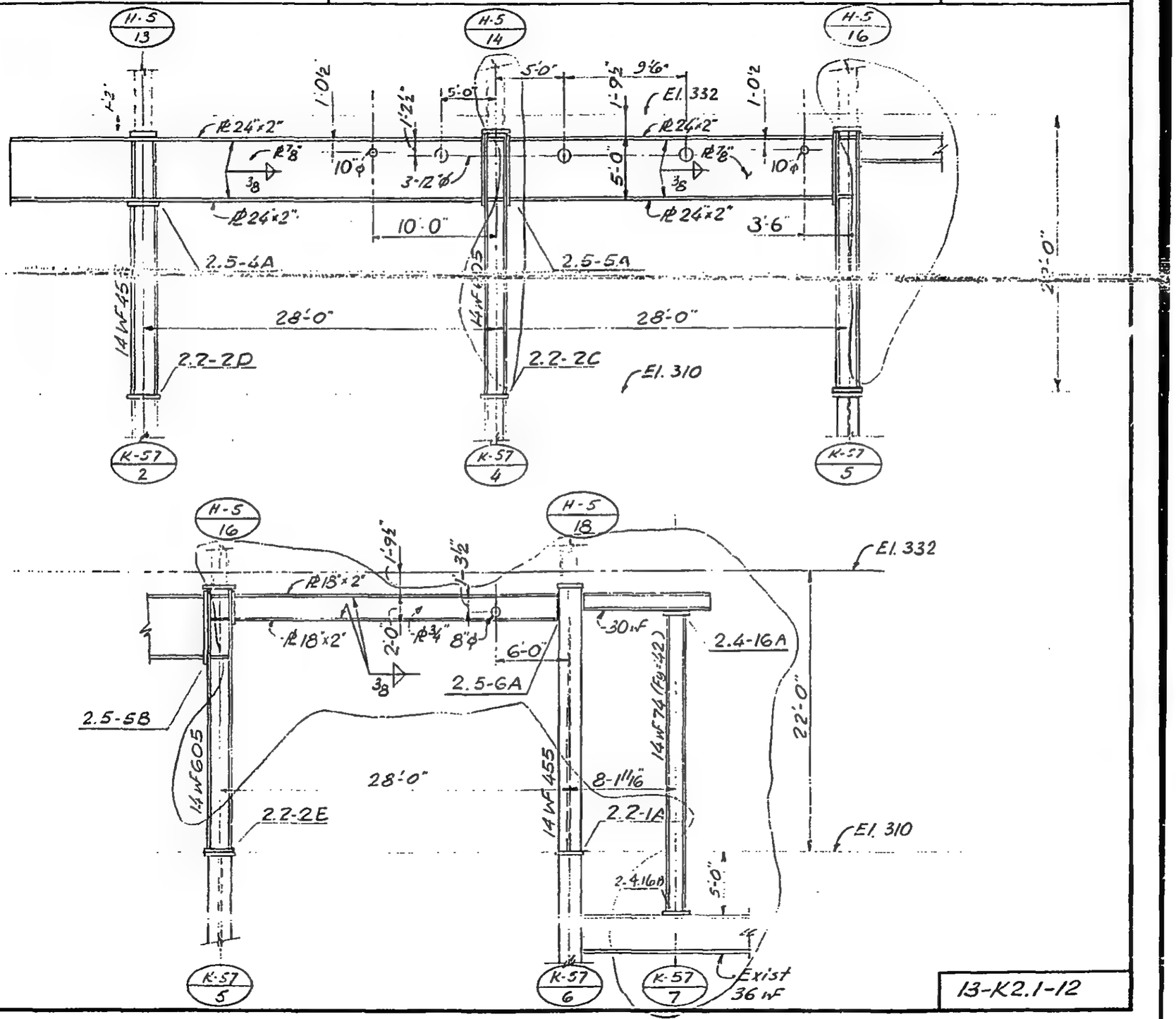

LICENSED PROFESSIONAL ENGINEER — LESLIE E. ROBERTSON — No 34380 — UNIVERSITY OF THE STATE OF NEW YORK

DESIGNED K. Chiang

DRAWN John Gricunas

REVIEWED

13-K2.1-12

SKILLING, HELLE, CHRISTIANSEN, ROBERTSON — Structural & Civil Engineers

PROJECT: THE WORLD TRADE CENTER | TITLE: COLUMN ELEVATION | DATE: 11-3-72

REVISIONS

Released for construction 11-20-72

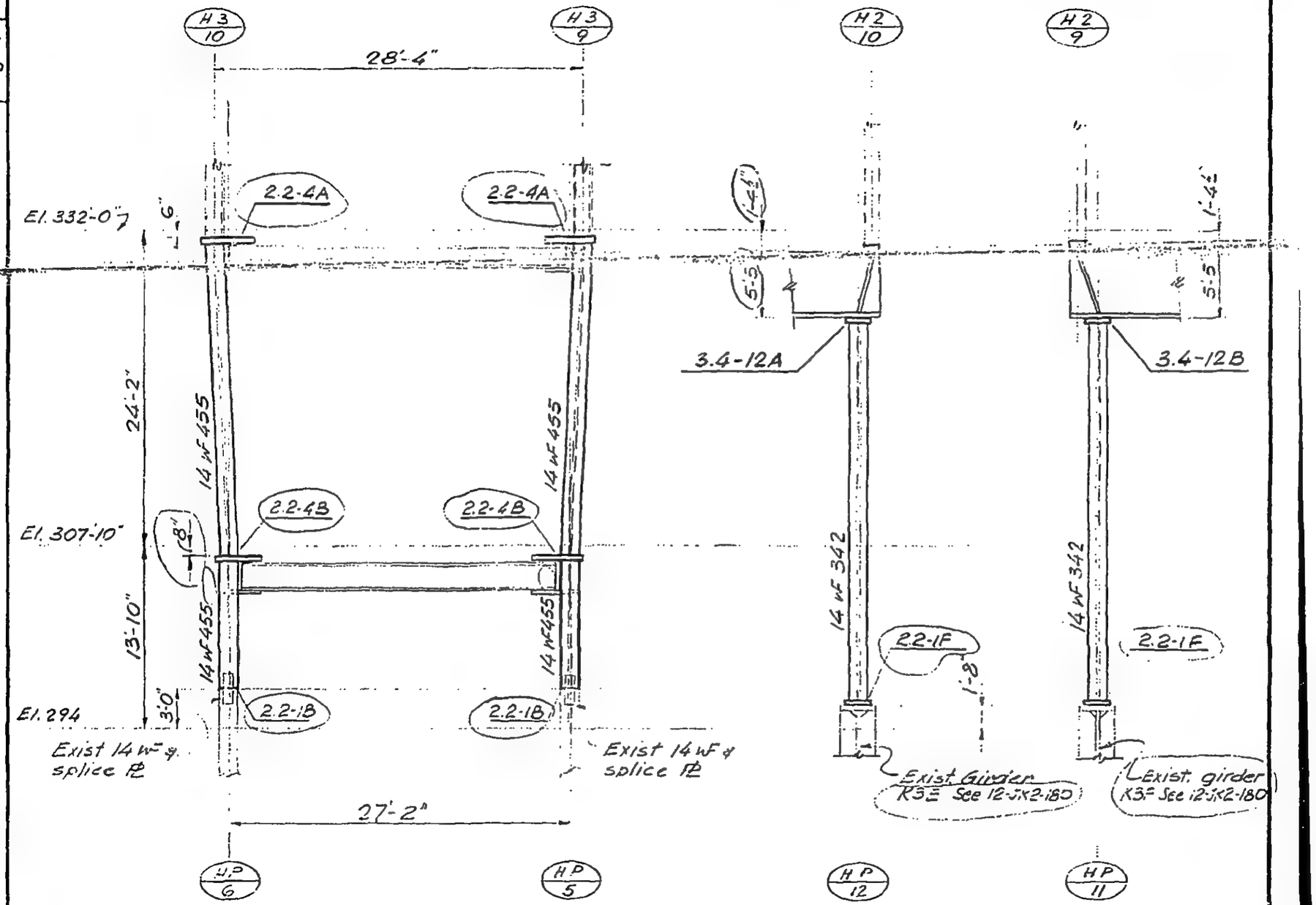

LICENSED PROFESSIONAL ENGINEER — LESLIE E. ROBERTSON — NO. 34360 — UNIVERSITY OF THE STATE OF NEW YORK

DESIGNED

DRAWN

REVIEWED

13-K2.1-13

SKILLING, HELLE, CHRISTIANSEN, ROBERTSON — Structural & Civil Engineers

PROJECT THE WORLD TRADE CENTER | TITLE COLUMN ELEVATIONS | DATE 11-3-72

REVISIONS

RELEASE FOR CONSTRUCTION 11-15-72

12-11-72

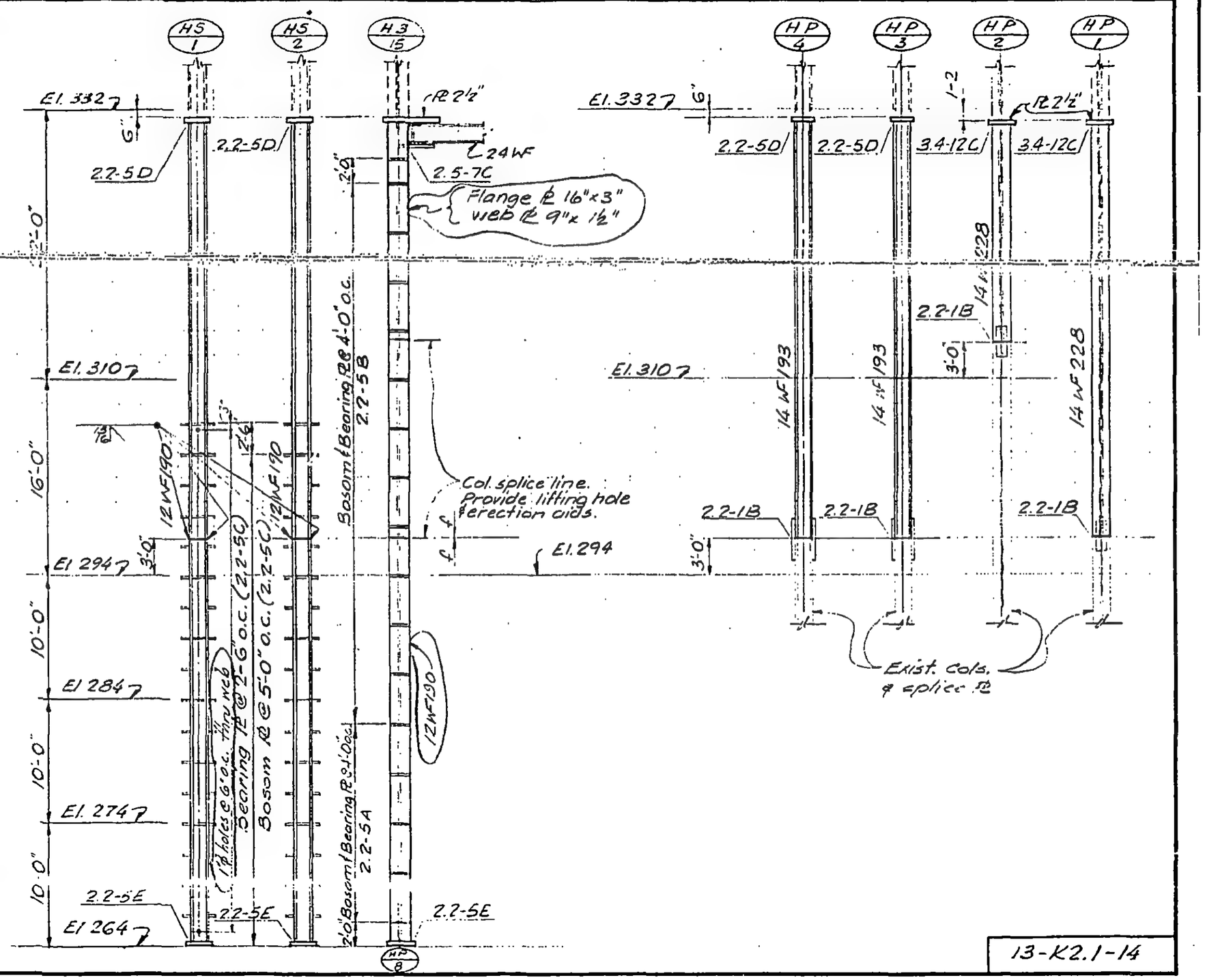

LICENSED PROFESSIONAL ENGINEER
LESLIE E. ROBERTSON
No 34360
UNIVERSITY OF THE STATE OF NEW YORK

DESIGNED

DRAWN John Grieves

REVIEWED

13-K2.1-14

SKILLING, HELLE, CHRISTIANSEN, ROBERTSON — Structural & Civil Engineers

PROJECT THE WORLD TRADE CENTER | TITLE COLUMN ELEVATION | DATE 11-3-72

REVISIONS

Release for construction 11-20-72

12-11-72

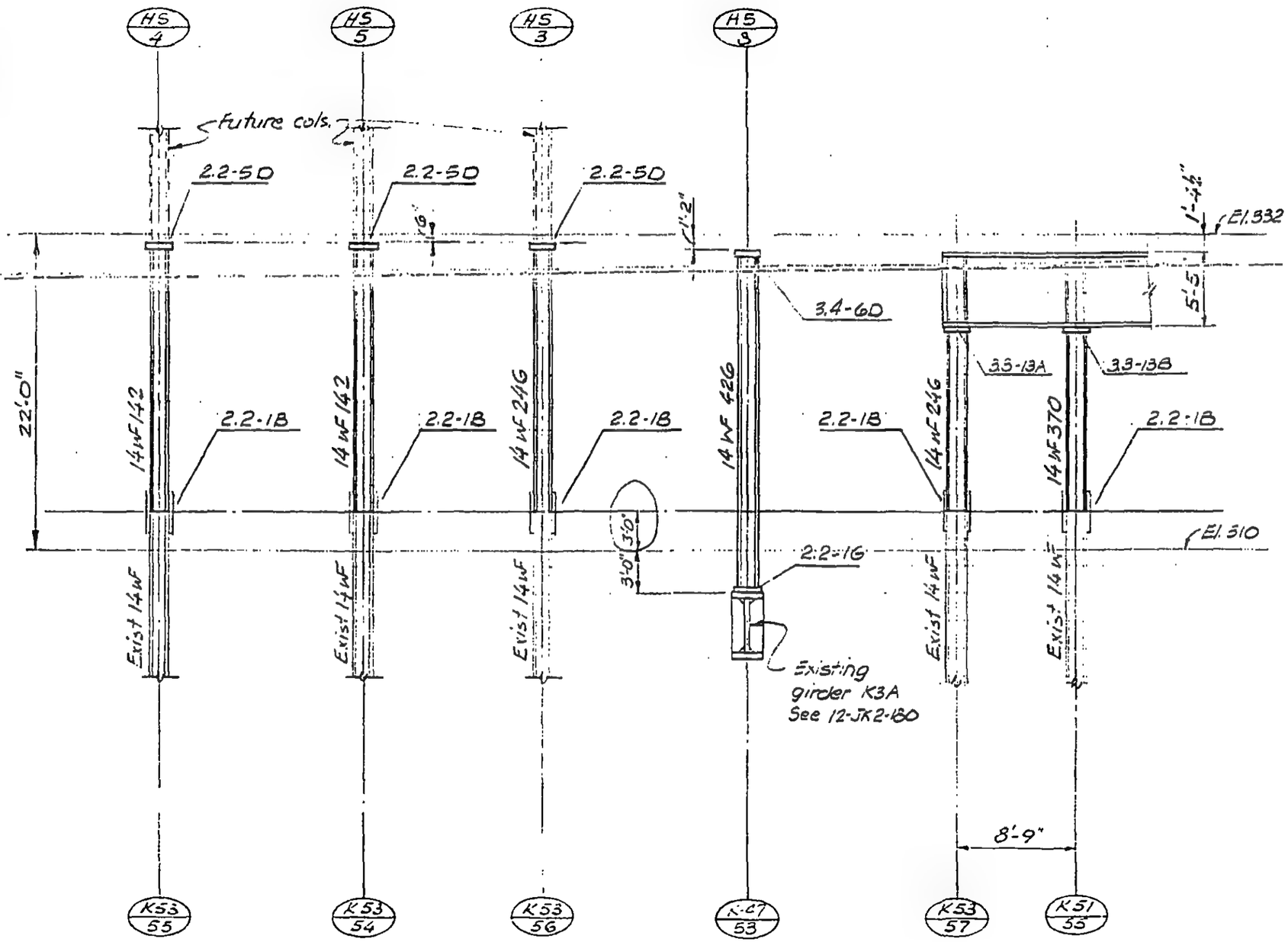

LICENSED PROFESSIONAL ENGINEER — LESLIE E. ROBERTSON — No 34360 — UNIVERSITY OF THE STATE OF NEW YORK

DESIGNED

DRAWN John Gaines

REVIEWED

13-K2.1-15

SKILLING, HELLE, CHRISTIANSEN, ROBERTSON — Structural & Civil Engineers

PROJECT: THE WORLD TRADE CENTER | TITLE: COLUMN BASE DETAILS | DATE: 11-3-72

REVISIONS

RELEASE FOR CONSTRUCTION 11-20-72

2-5-73

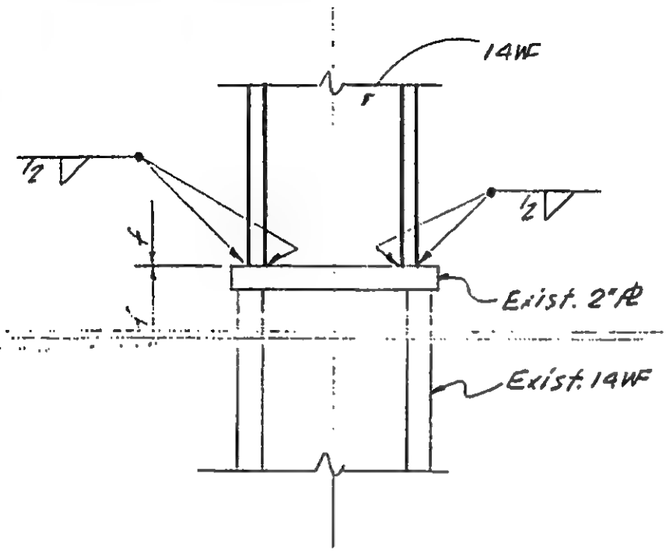

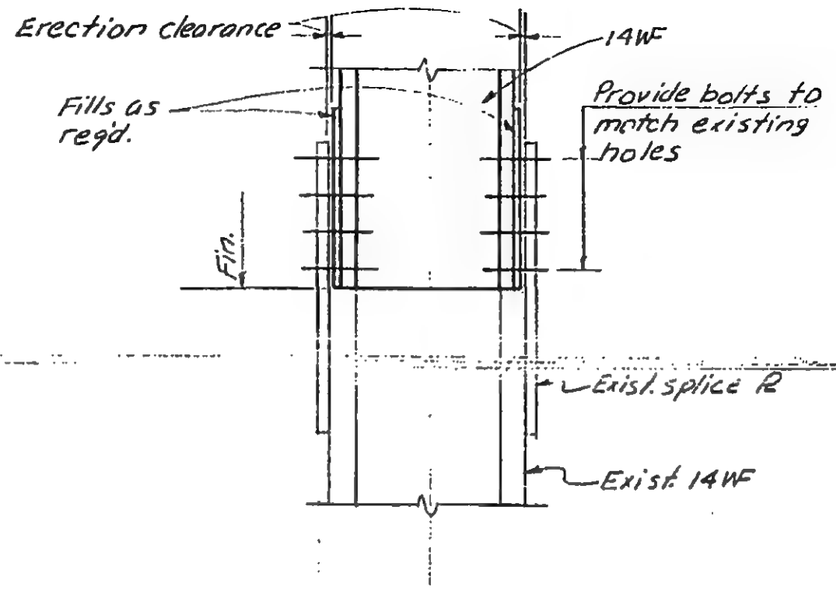

A | B

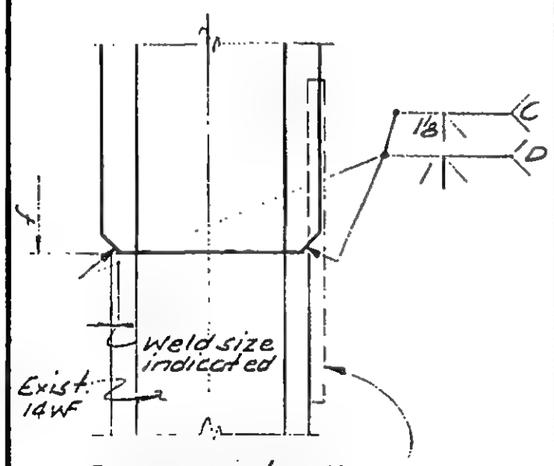

C
D

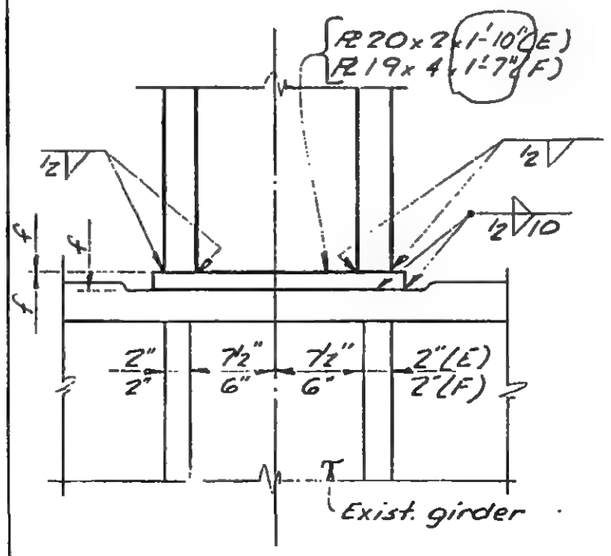

E
F
G

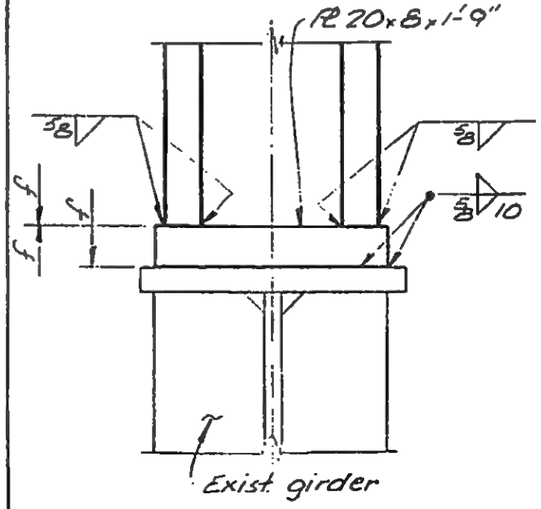

13-K2.2-1

LICENSED PROFESSIONAL ENGINEER — LESLIE E. ROBERTSON — No 34360 — UNIVERSITY OF THE STATE OF NEW YORK

DESIGNED

DRAWN A.L. Franqui

REVIEWED

SKILLING, HELLE, CHRISTIANSEN, ROBERTSON — Structural & Civil Engineers

PROJECT THE WORLD TRADE CENTER | TITLE COLUMN BASE DETAILS | DATE 11-3-72

REVISIONS

RELEASE FOR CONSTRUCTION 11-20-72

2-5-73

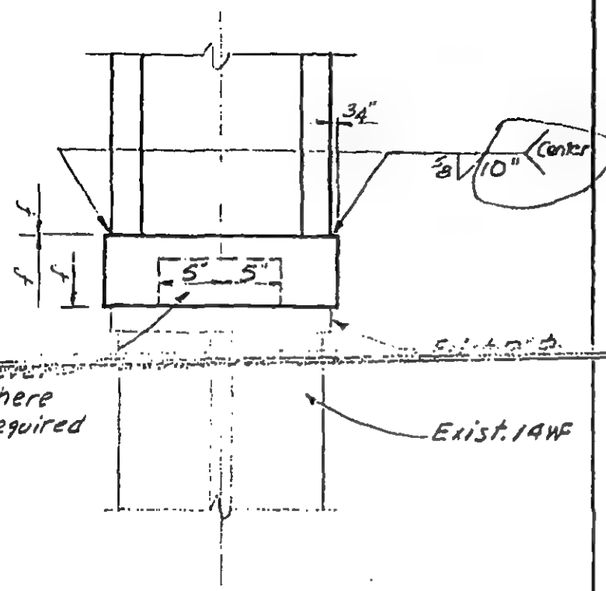

a

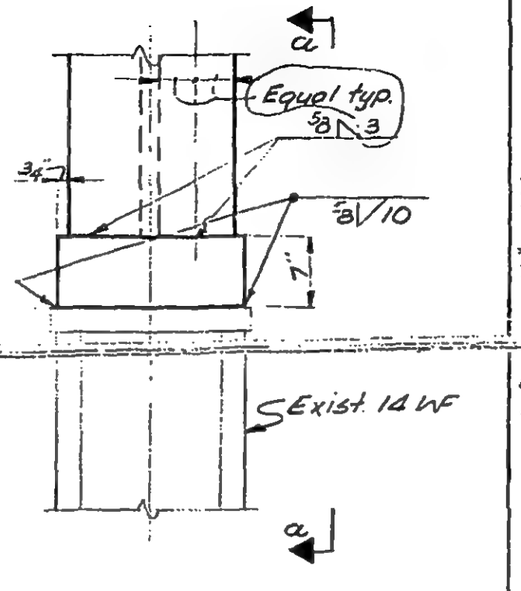

E

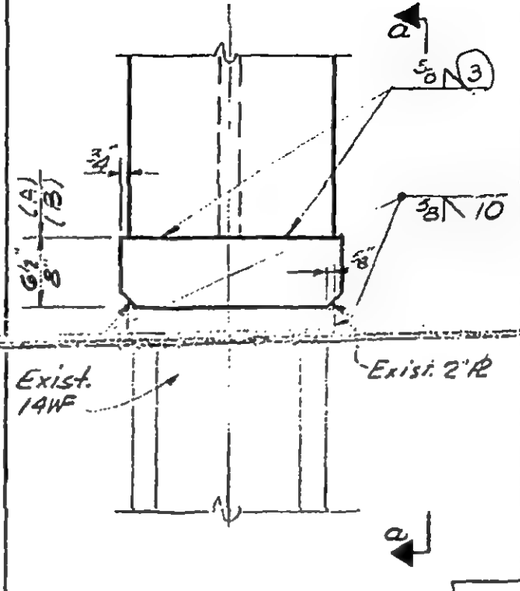

A
B

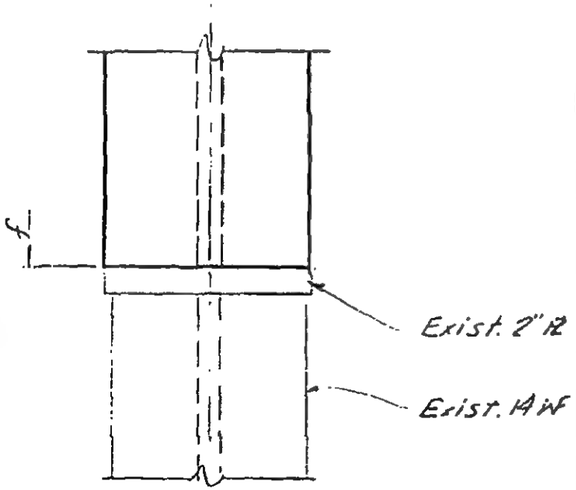

c

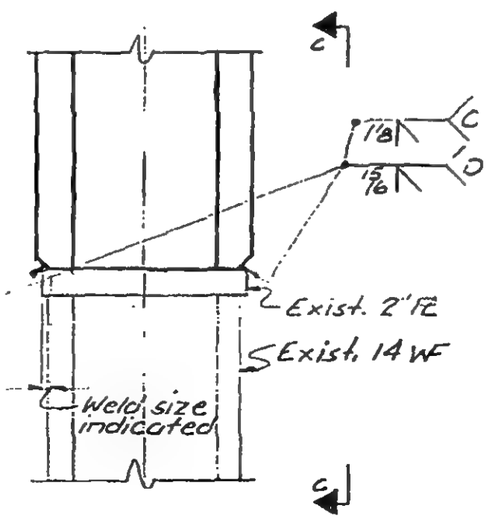

C
D

LICENSED PROFESSIONAL ENGINEER
LESLIE E. ROBERTSON
No 34360
UNIVERSITY OF THE STATE OF NEW YORK

DESIGNED

DRAWN
A.L. Frangui

REVIEWED

13-K2.2-2

SKILLING, HELLE, CHRISTIANSEN, ROBERTSON — Structural & Civil Engineers

PROJECT: THE WORLD TRADE CENTER | TITLE: COLUMN BASE DETAILS | DATE: 11-3-72

REVISIONS

RELEASE FOR CONSTRUCTION 11-20-72

2-5-73

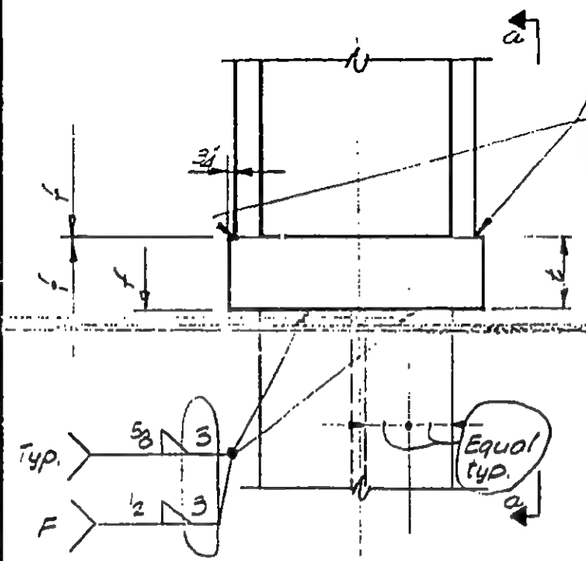

Width W	Thick t	Det No.	
2'-0"	5"	A	
2'-0"	7"	B	
1'-10"	6½"	C	
2'-0"	9"	D	
2'-0"	6½"	E	
2'-0"	5"	F	a

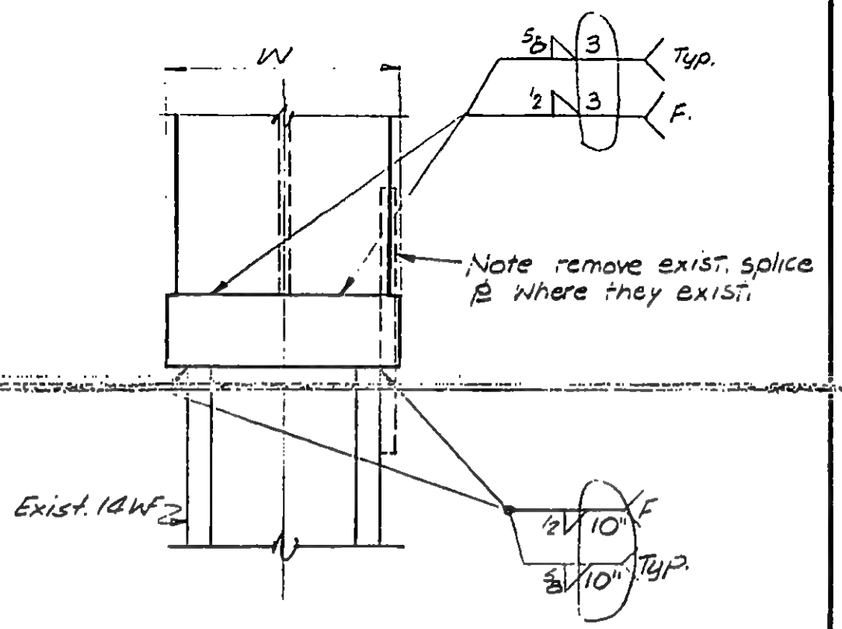

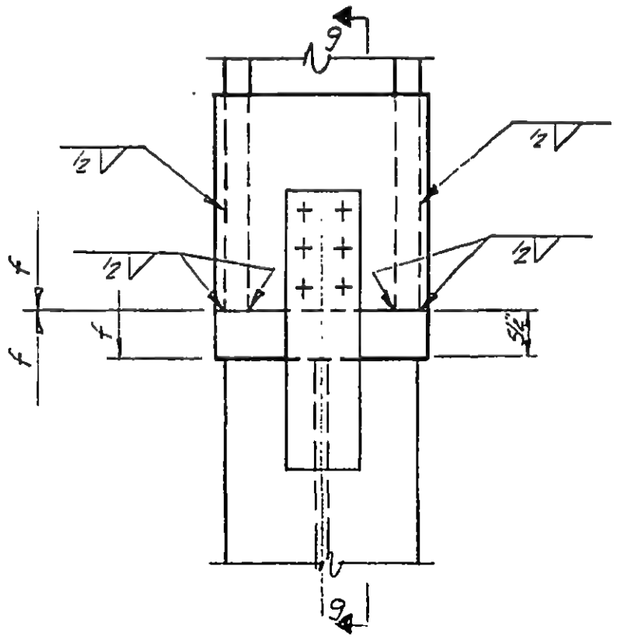

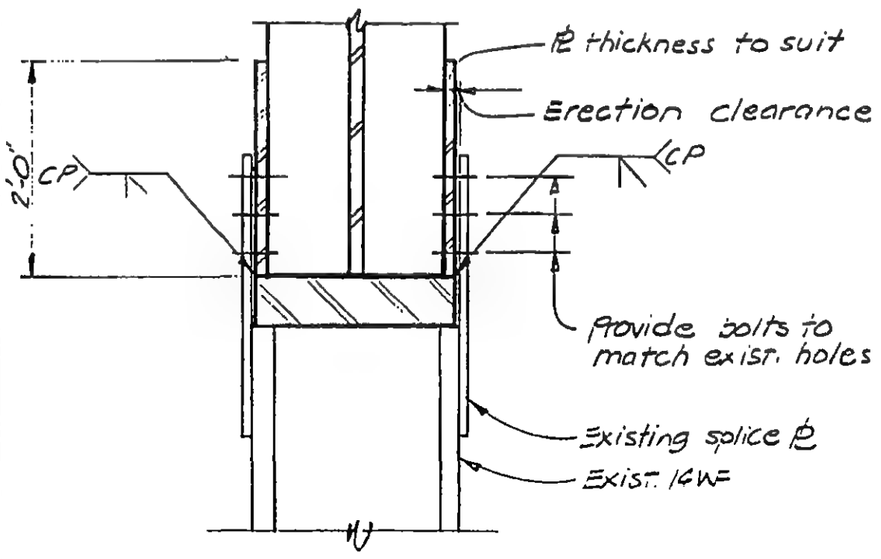

DESIGNED

DRAWN

REVIEWED

LICENSED PROFESSIONAL ENGINEER LESLIE E. ROBERTSON No 34360 UNIVERSITY OF THE STATE OF NEW YORK

G 9

13-K2.2.3

SKILLING, HELLE, CHRISTIANSEN, ROBERTSON — Structural & Civil Engineers

PROJECT THE WORLD TRADE CENTER | TITLE COLUMN DETAILS | DATE 11-20-72

REVISIONS

RELEASE FOR CONSTRUCTION 11-20-72

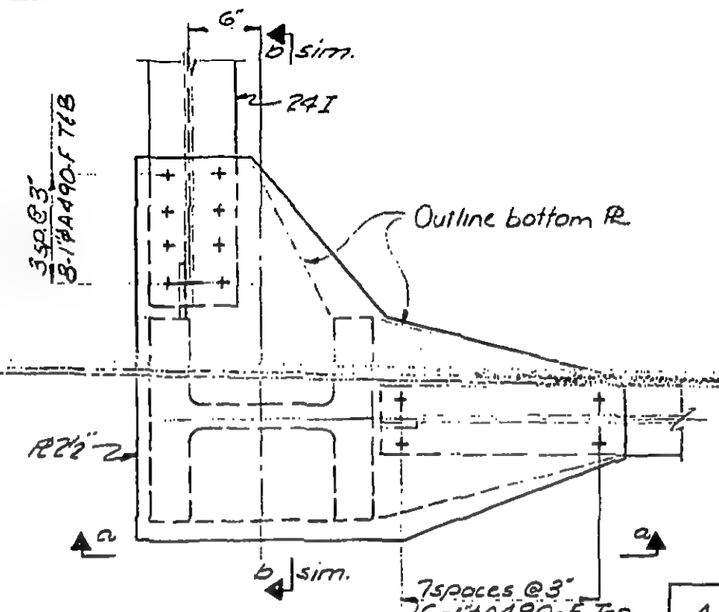

A a

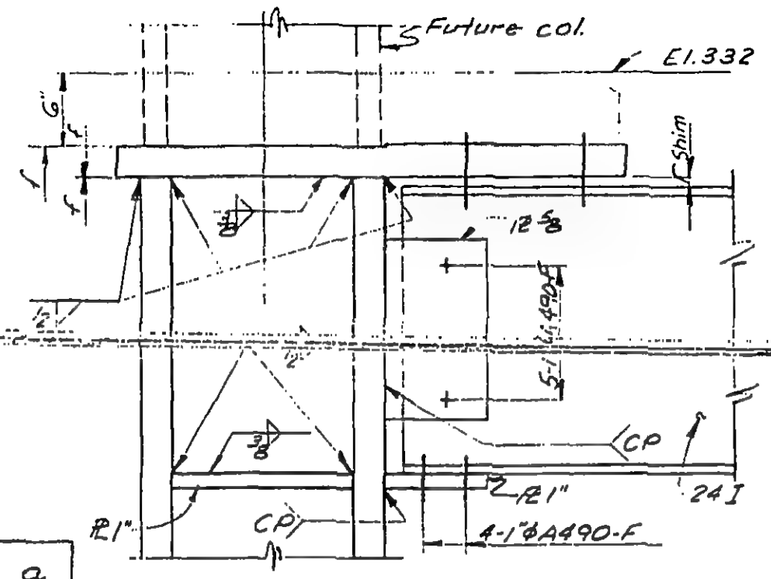

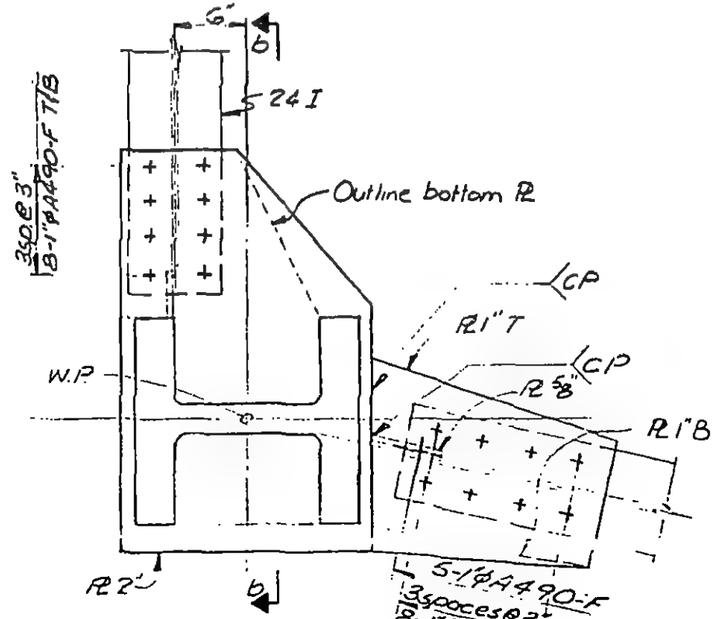

B b

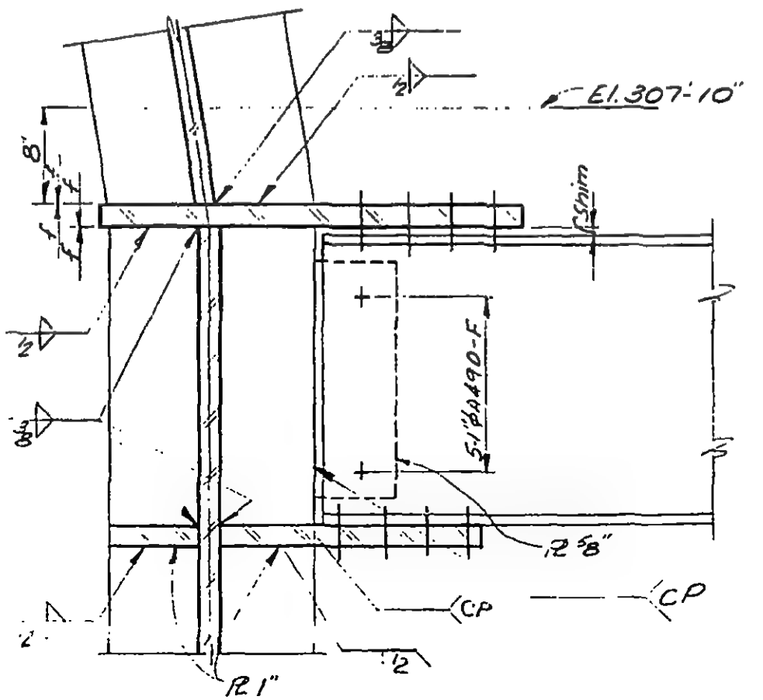

13-K2.2-4

LICENSED PROFESSIONAL ENGINEER
LESLIE E. ROBERTSON
No. 34360
UNIVERSITY OF THE STATE OF NEW YORK

DESIGNED

DRAWN TR

REVIEWED

SKILLING, HELLE, CHRISTIANSEN, ROBERTSON — Structural & Civil Engineers

PROJECT: THE WORLD TRADE CENTER | TITLE: COLUMN BASE DETAILS | DATE: 11-3-72

REVISIONS

RELEASE FOR CONSTRUCTION 11-15-72

12-11-72

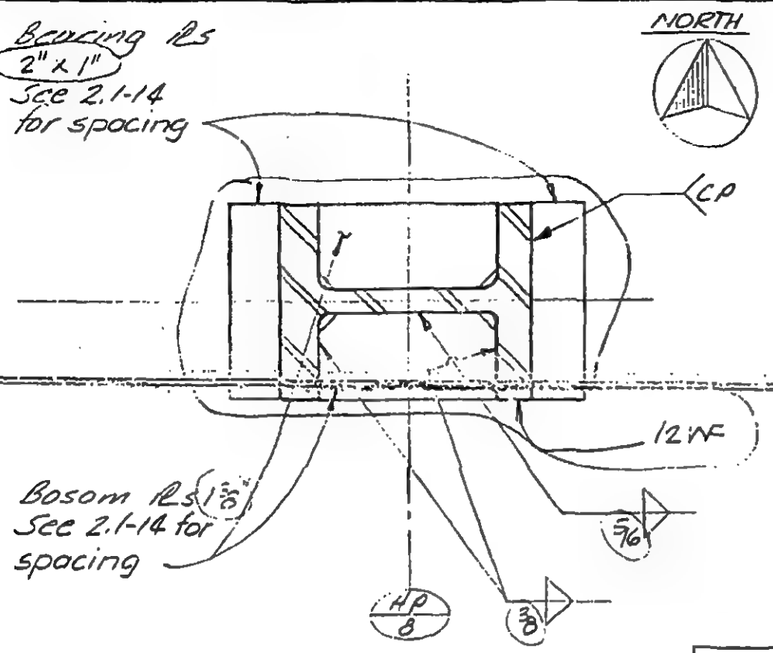

A

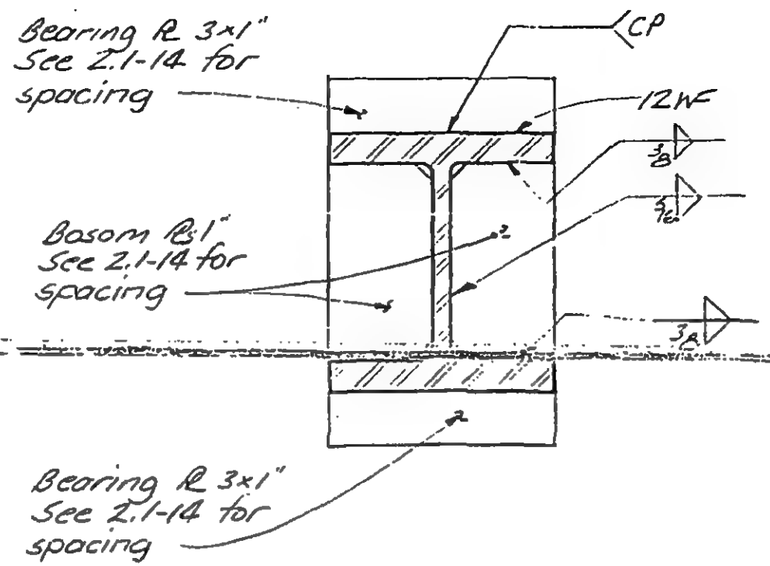

C

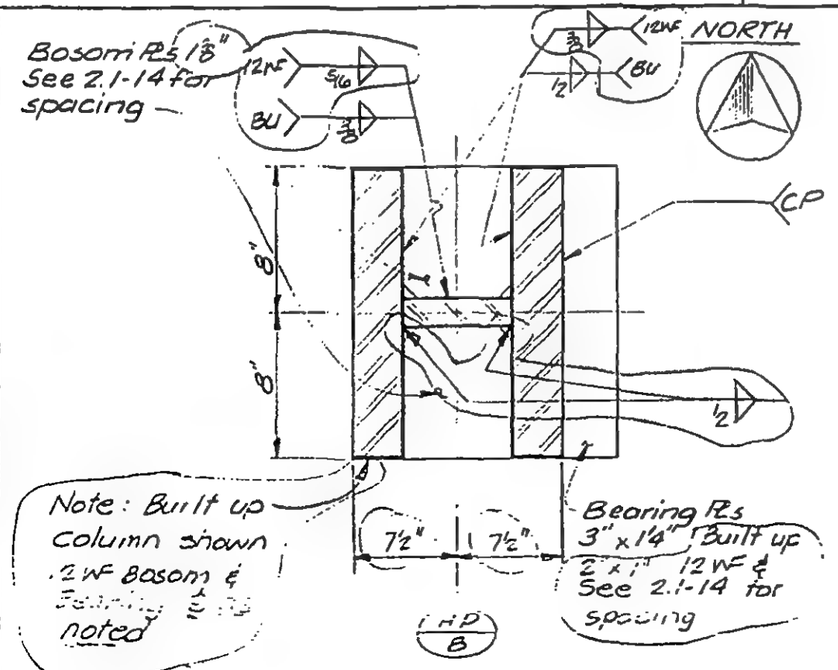

B

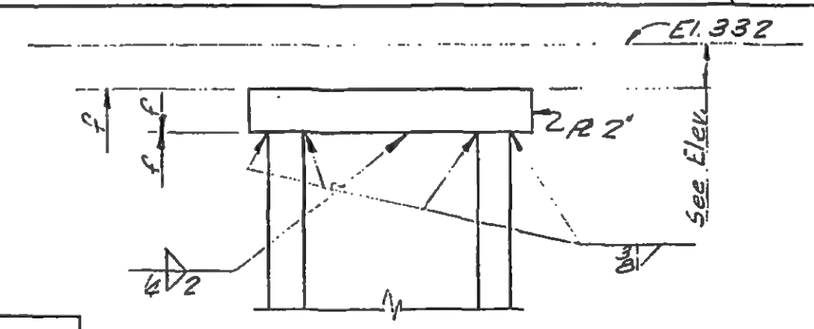

D

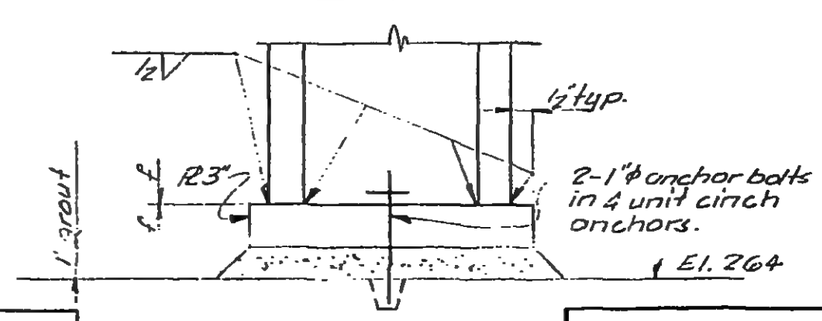

E

13-KZ.2-5

LICENSED PROFESSIONAL ENGINEER — LESLIE E. ROBERTSON — NO 34360 — UNIVERSITY OF THE STATE OF NEW YORK

DESIGNED

DRAWN

REVIEWED

SKILLING, HELLE, CHRISTIANSEN, ROBERTSON — Structural & Civil Engineers

PROJECT: THE WORLD TRADE CENTER | TITLE: TYPICAL GIRDER DETAILS | DATE: 11-3-72

REVISIONS

RELEASE FOR CONSTRUCTION 11-20-72

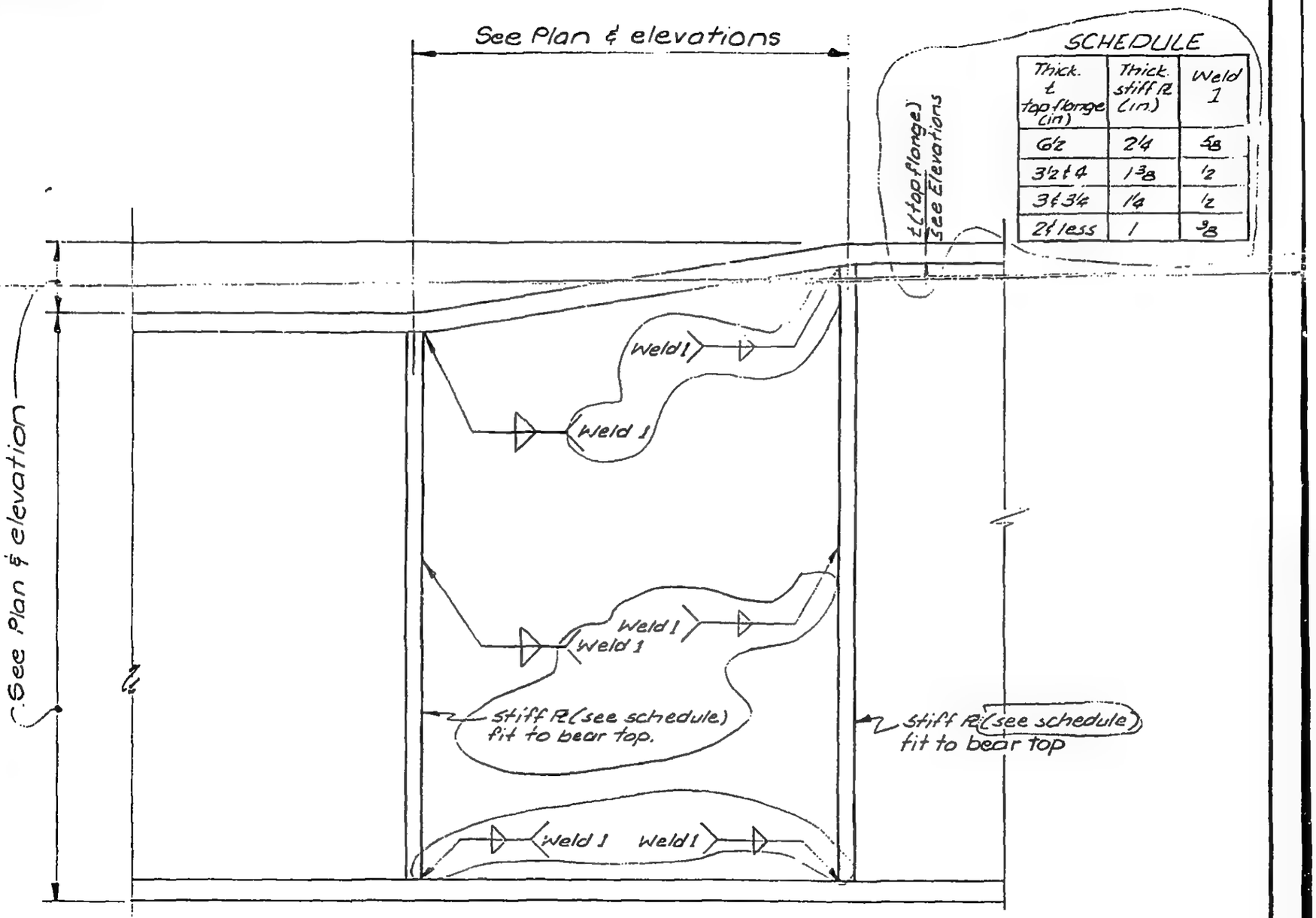

SCHEDULE

Thick. t top flange (in)	Thick. stiff PL (in.)	Weld 1
6½	2¼	⅝
3½ ℄ 4	1⅜	½
3 ℄ 3¼	1¼	½
2 ℄ less	1	⅜

LICENSED PROFESSIONAL ENGINEER LESLIE E. ROBERTSON NO 34360 UNIVERSITY OF THE STATE OF NEW YORK

DESIGNED

DRAWN

REVIEWED

13-K2.3-1

SKILLING, HELLE, CHRISTIANSEN, ROBERTSON — Structural & Civil Engineers

PROJECT: THE WORLD TRADE CENTER

TITLE: GIRDER TO COLUMN CONNECTION TYPICAL AT END PLATE

DATE: 11-20-72

REVISIONS

RELEASE FOR CONSTRUCTION 11-20-72

12-11-72

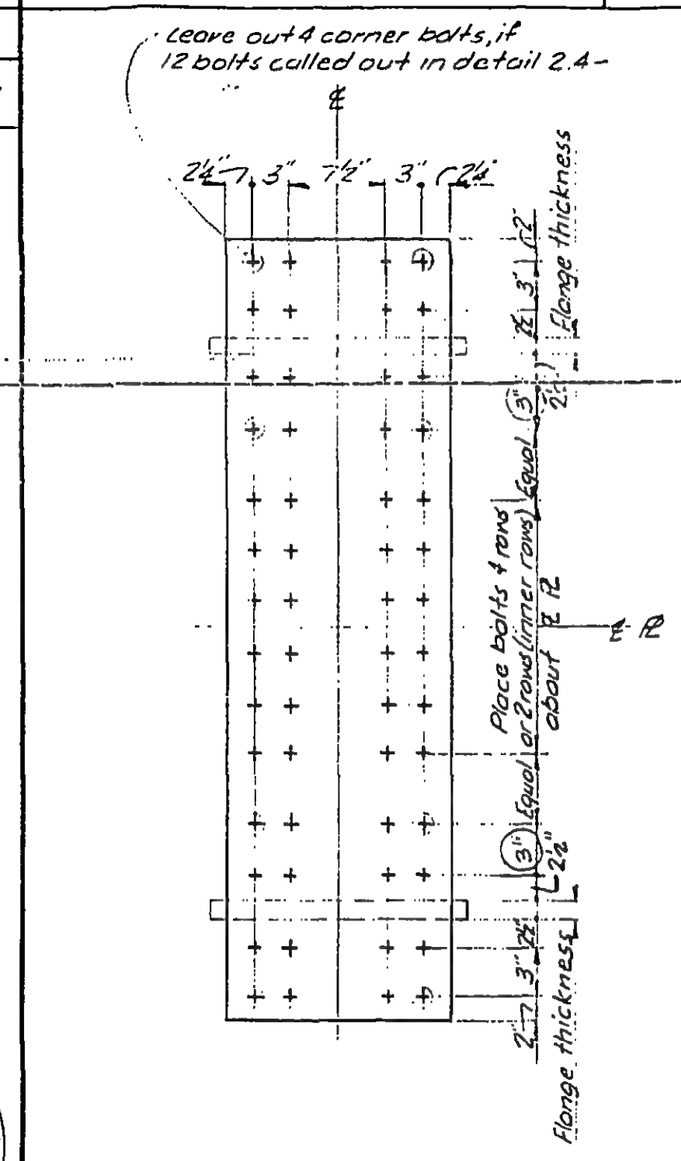

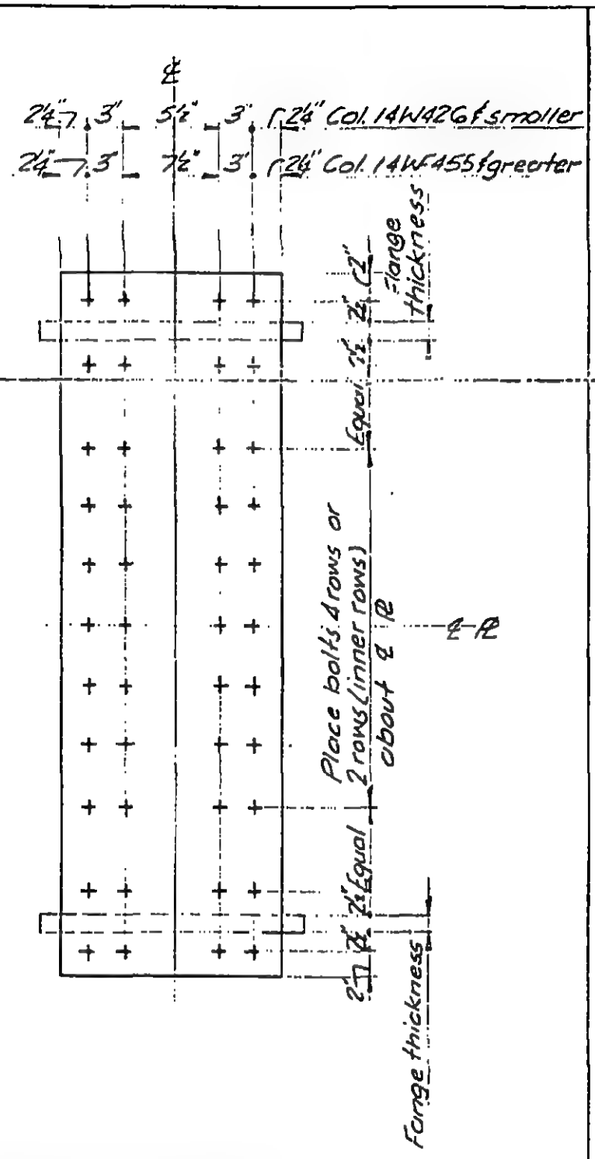

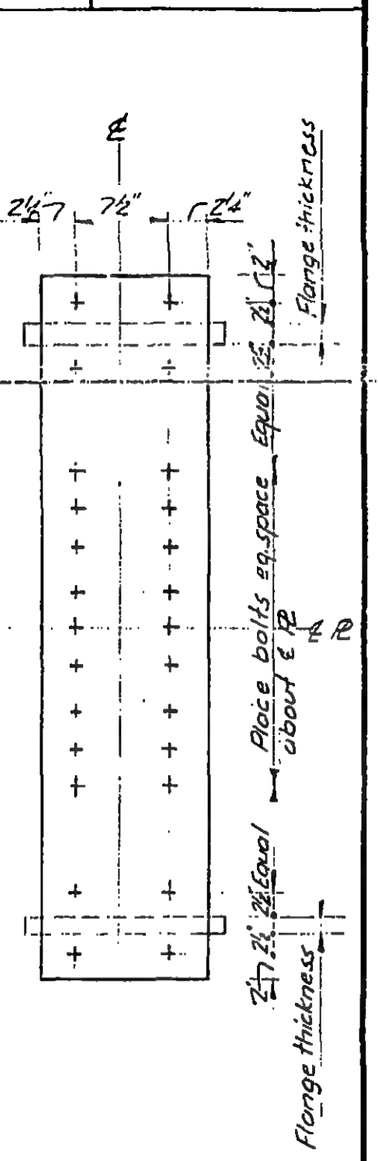

Notes to 2.4 Details

1. See specific 2.4 Details for number of bolts.
2. All bolts of 2.4 Details to be A490 x ¾ unless otherwise noted.

LICENSED PROFESSIONAL ENGINEER — LESLIE E. ROBERTSON — No 34360 — UNIVERSITY OF THE STATE OF NEW YORK

DESIGNED

DRAWN: TR

REVIEWED

A B C

13-K2.3-2

SKILLING, HELLE, CHRISTIANSEN, ROBERTSON — Structural & Civil Engineers

PROJECT THE WORLD TRADE CENTER | TITLE GIRDER FLANGE SPLICES - TYPICAL DETAILS | DATE 6-4-73

REVISIONS

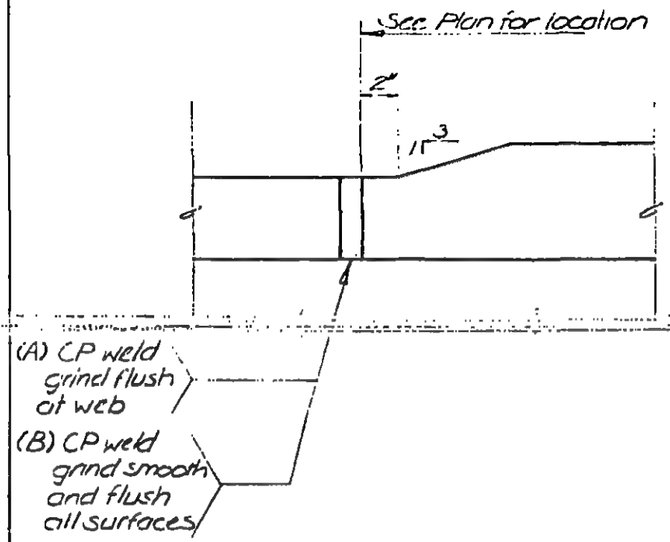

A

Upside down B

LICENSED PROFESSIONAL ENGINEER
LESLIE E. ROBERTSON
No 34360
UNIVERSITY OF THE STATE OF NEW YORK

DESIGNED

DRAWN

REVIEWED LEOB

13-K 2.3-3

SKILLING, HELLE, CHRISTIANSEN, ROBERTSON — Structural & Civil Engineers

PROJECT: THE WORLD TRADE CENTER | TITLE: GIRDER COLUMN DETAILS | DATE: 11-3-72

REVISIONS

General Revision Released for construction 11-20-72

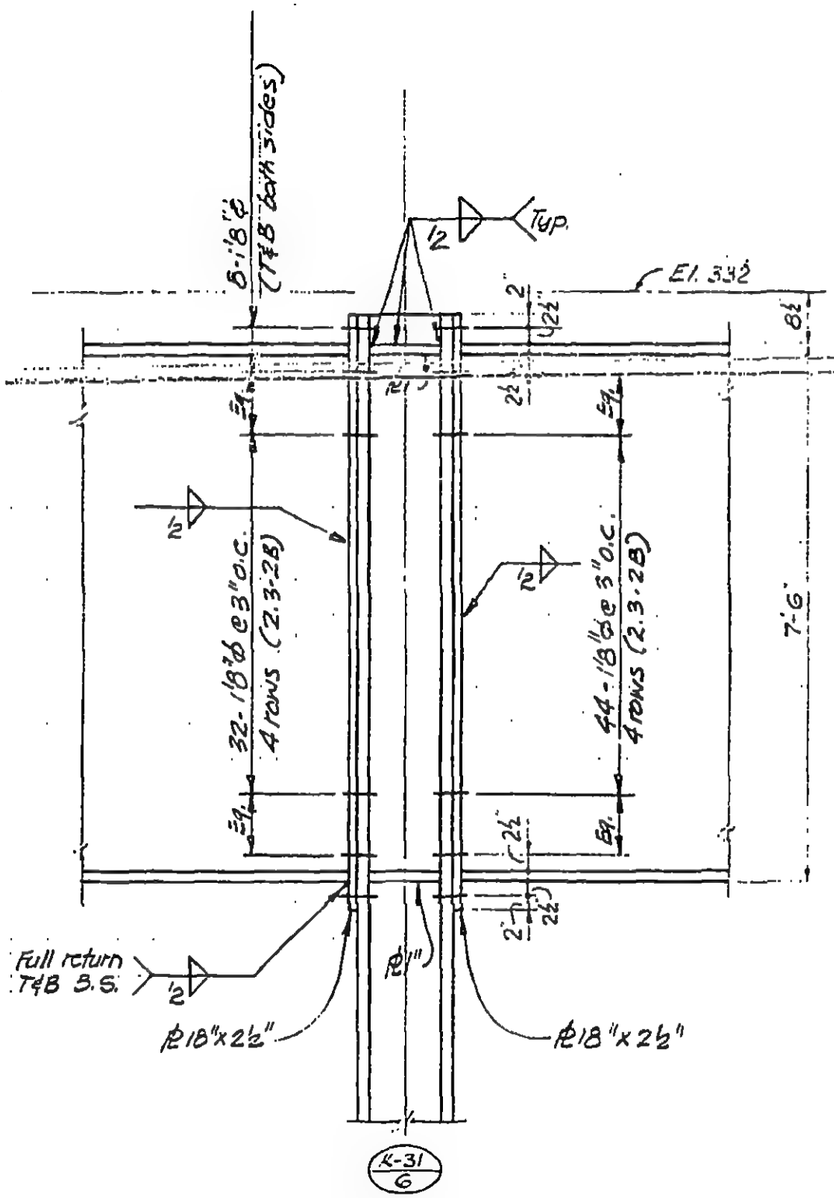

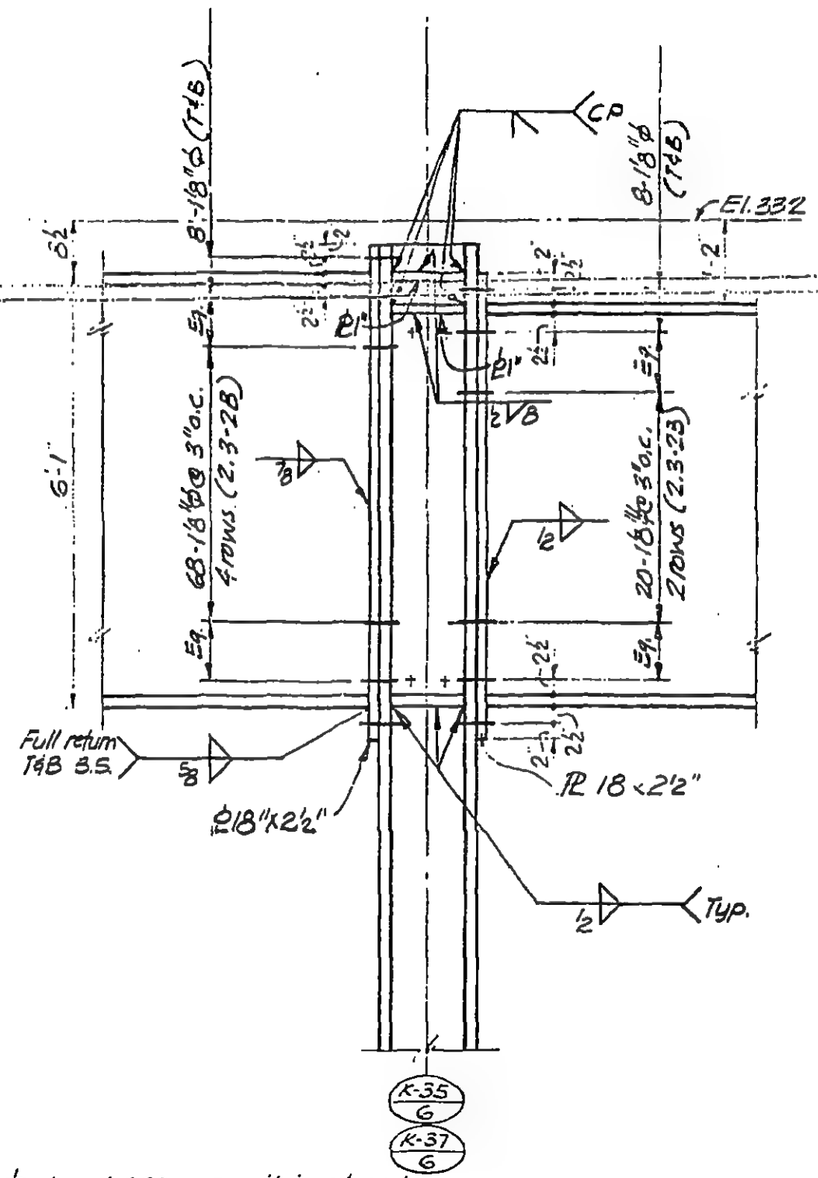

Note: All bolts to be A490x on this sheet.

LICENSED PROFESSIONAL ENGINEER — LESLIE E. ROBERTSON — No 34360 — UNIVERSITY OF THE STATE OF NEW YORK

DESIGNED

DRAWN John Gracey

REVIEWED

A | B

13-K2.4-1

SKILLING, HELLE, CHRISTIANSEN, ROBERTSON — Structural & Civil Engineers

PROJECT: THE WORLD TRADE CENTER | TITLE: GIRDER COLUMN DETAILS | DATE: 11-3-72

REVISIONS

Released for construction 11-20-72

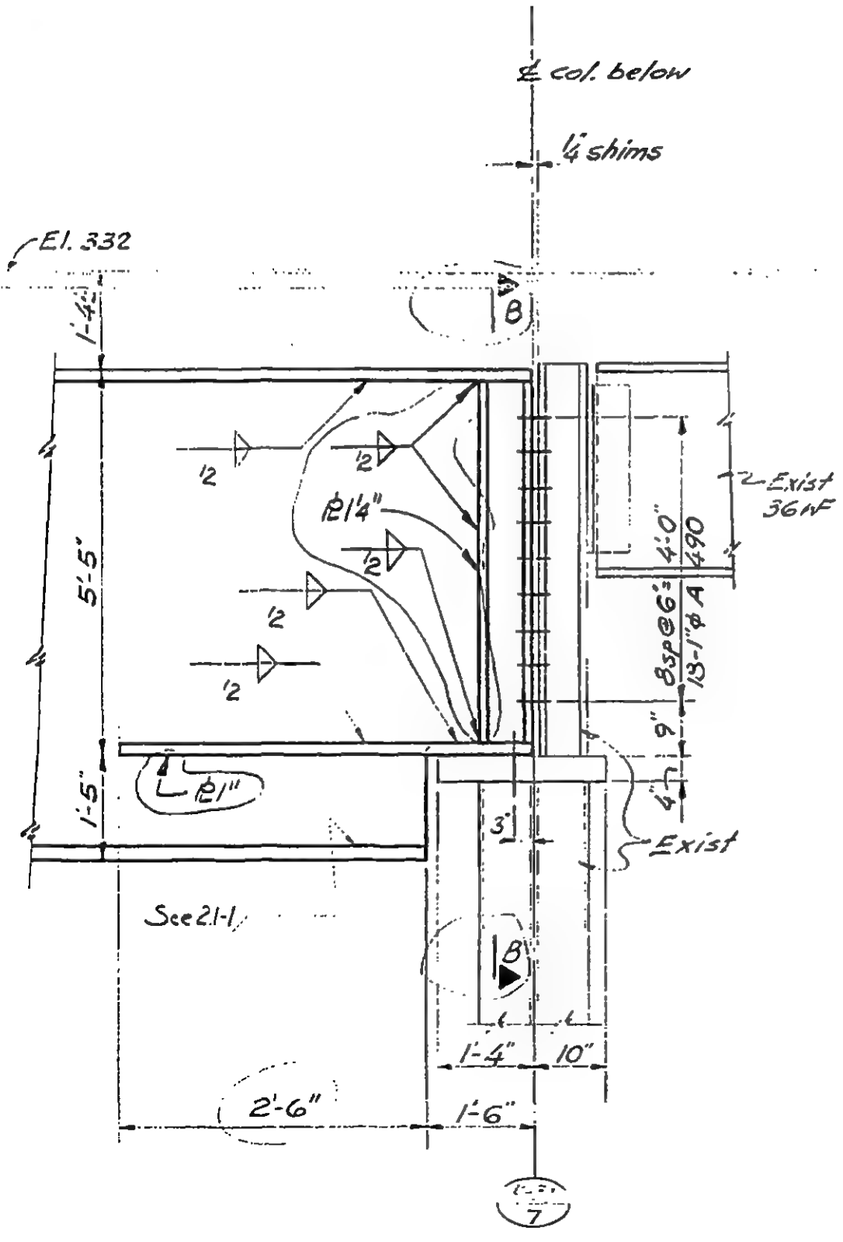

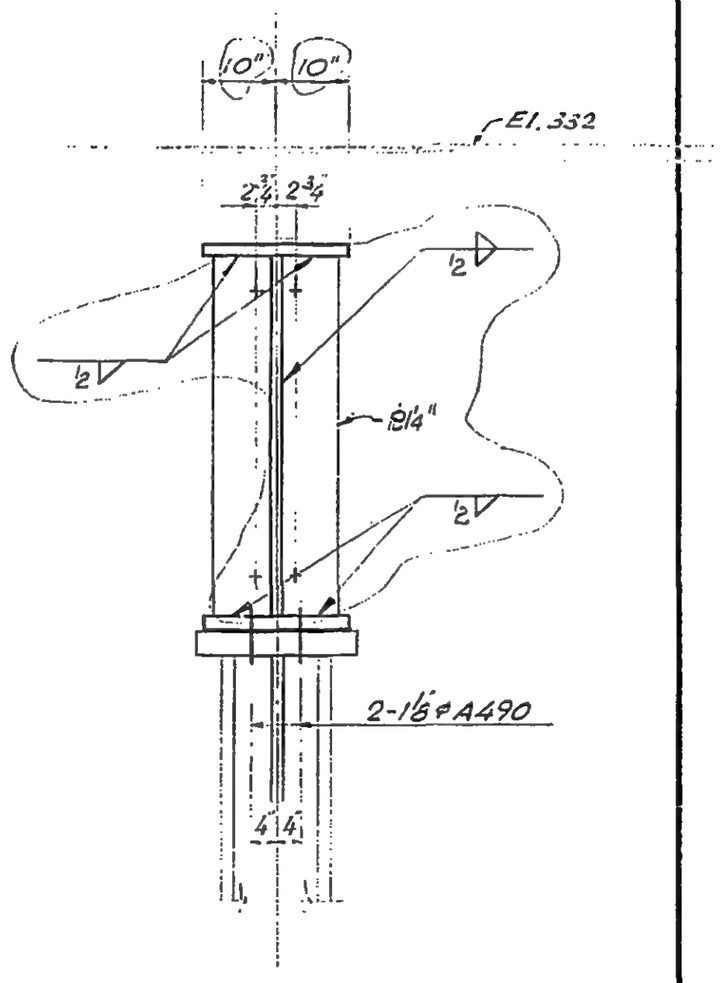

LICENSED PROFESSIONAL ENGINEER — LESLIE E. ROBERTSON — NO 34360 — UNIVERSITY OF THE STATE OF NEW YORK

DESIGNED

DRAWN John Grieves

REVIEWED

A | B

13-K2.4-2

SKILLING, HELLE, CHRISTIANSEN, ROBERTSON — Structural & Civil Engineers

PROJECT: THE WORLD TRADE CENTER | TITLE: GIRDER COLUMN DETAILS | DATE: 11-3-72

REVISIONS

Released for construction 11-20-72

2-5-73

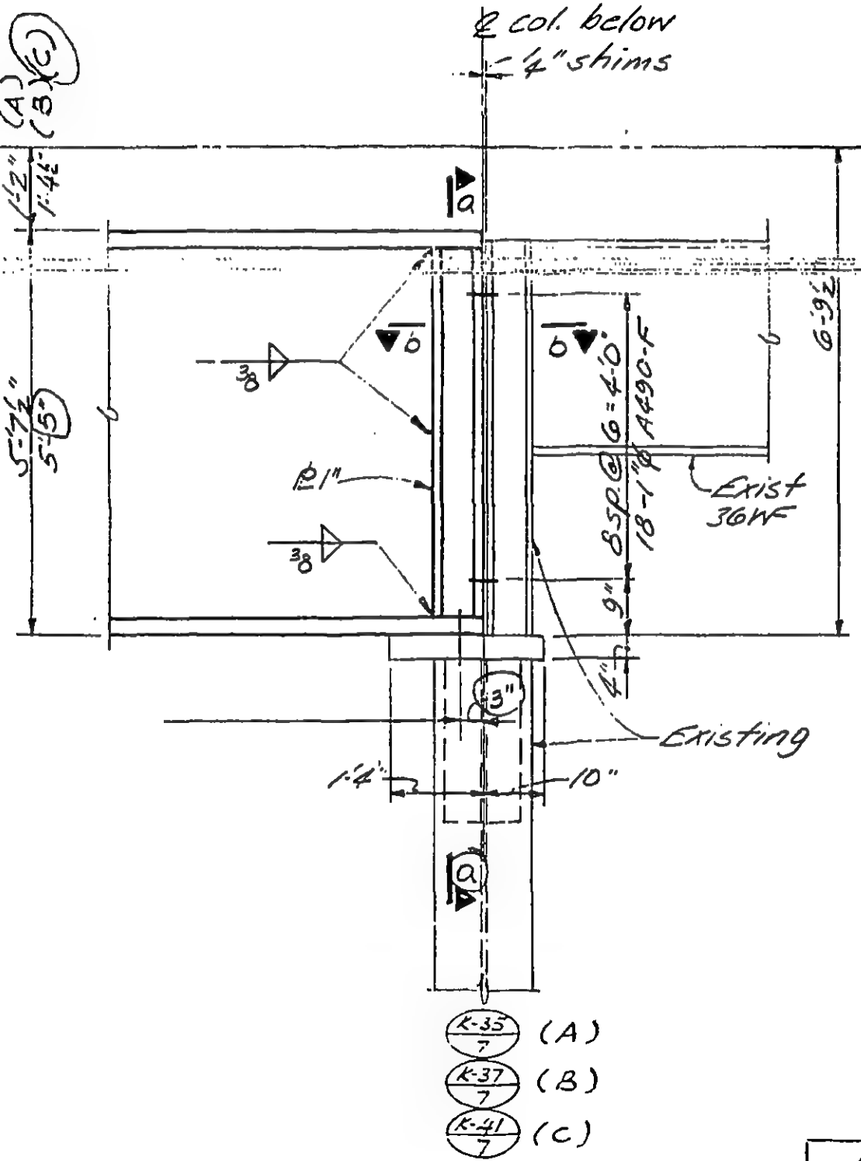

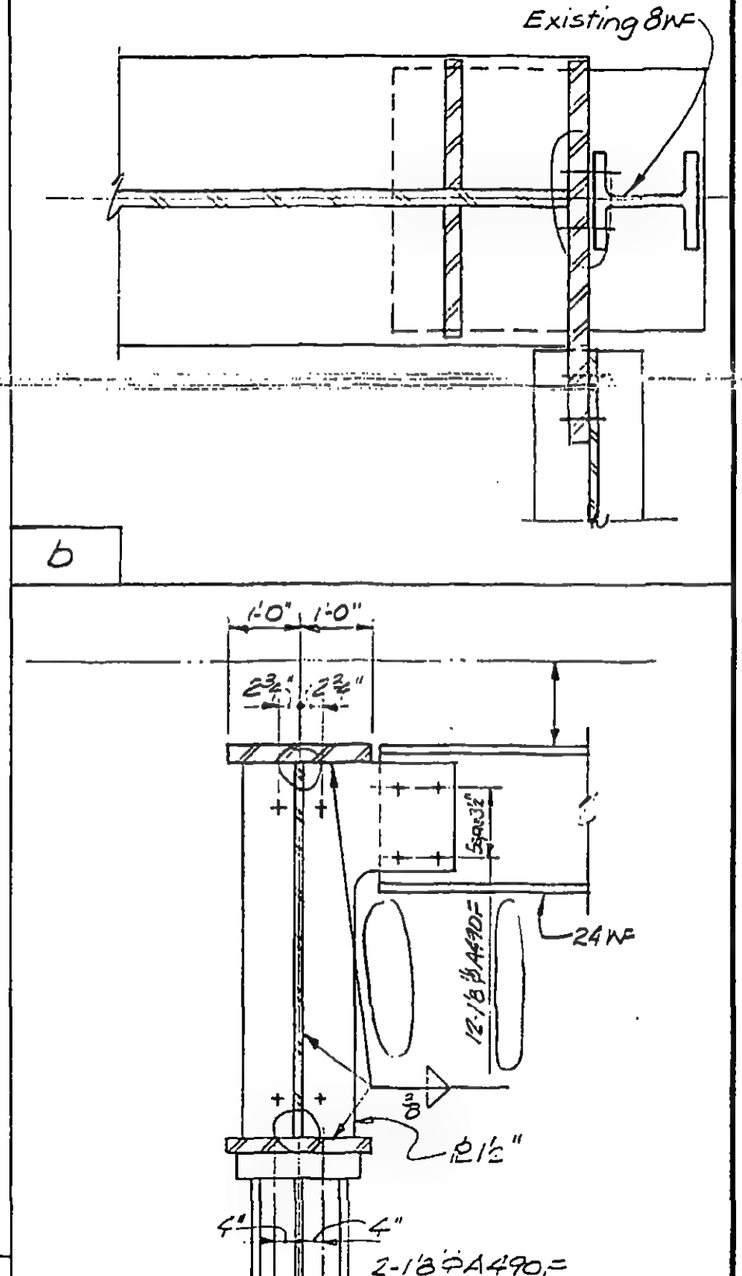

K-35/7 (A)
K-37/7 (B)
K-41/7 (C)

LICENSED PROFESSIONAL ENGINEER — LESLIE E. ROBERTSON — No 34360 — UNIVERSITY OF THE STATE OF NEW YORK

DESIGNED

DRAWN J.A.F.

REVIEWED

A	
3	
C	a

13-K2.4-3

SKILLING, HELLE, CHRISTIANSEN, ROBERTSON — Structural & Civil Engineers

PROJECT THE WORLD TRADE CENTER | TITLE GIRDER COLUMN DETAILS | DATE 11-3-72

REVISIONS

General Revision Released for Construction 11-20-72

2-5-73

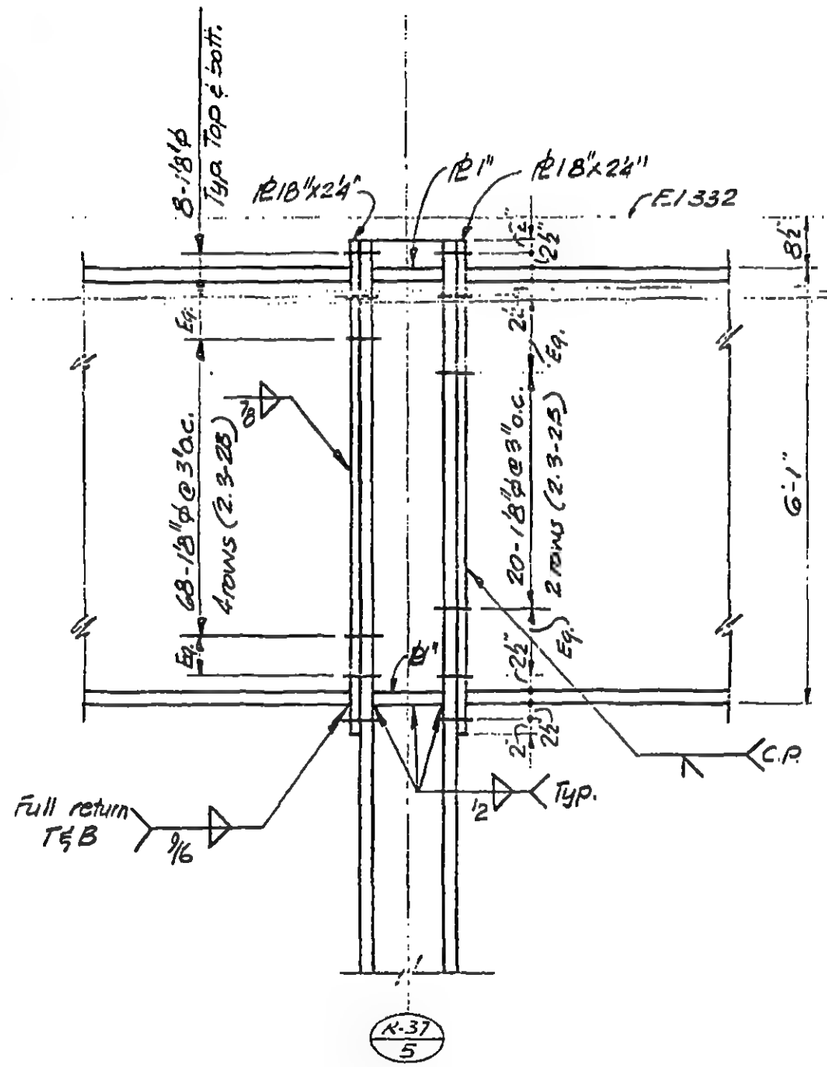

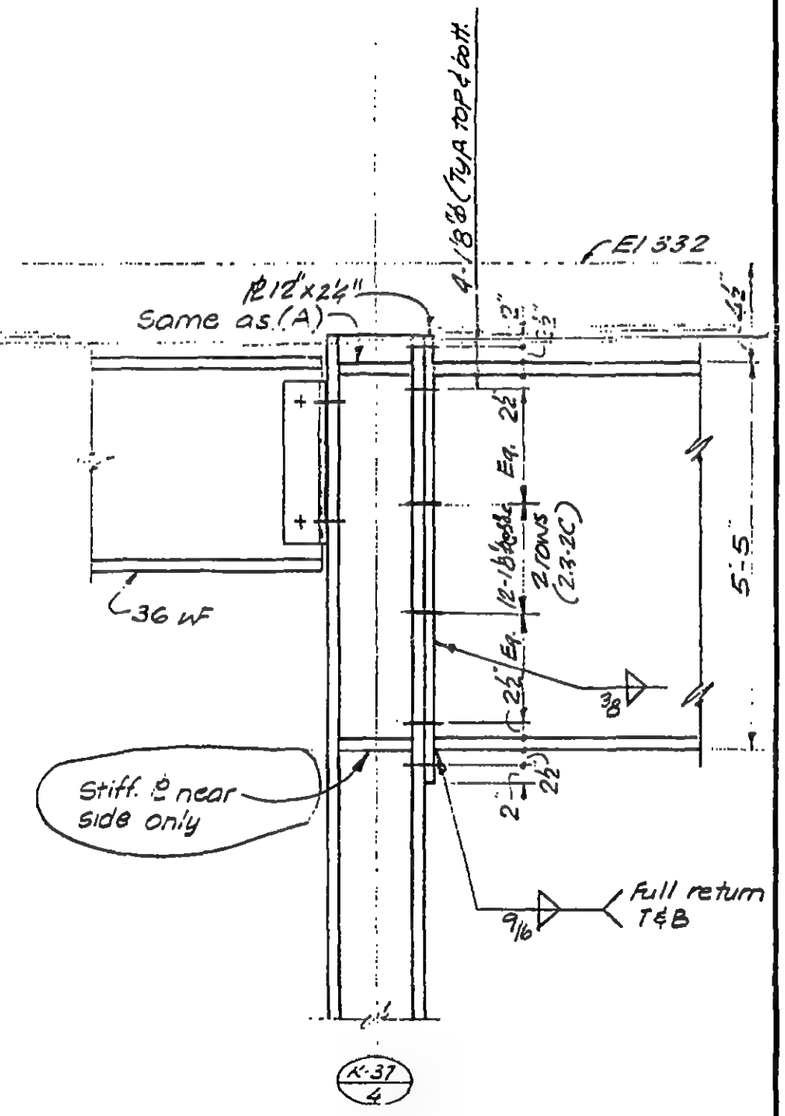

Note: All bolts A490X on this sheet

A | B

13-K2.4-4

LICENSED PROFESSIONAL ENGINEER — LESLIE E. ROBERTSON — No 34360 — UNIVERSITY OF THE STATE OF NEW YORK

DESIGNED

DRAWN John Greaney

REVIEWED

SKILLING, HELLE, CHRISTIANSEN, ROBERTSON — Structural & Civil Engineers

PROJECT THE WORLD TRADE CENTER | TITLE GIRDER COLUMN - DETAILS | DATE 11-3-72

REVISIONS

General Revision Released for Construction 11-20-72

12-11-72

2-5-73

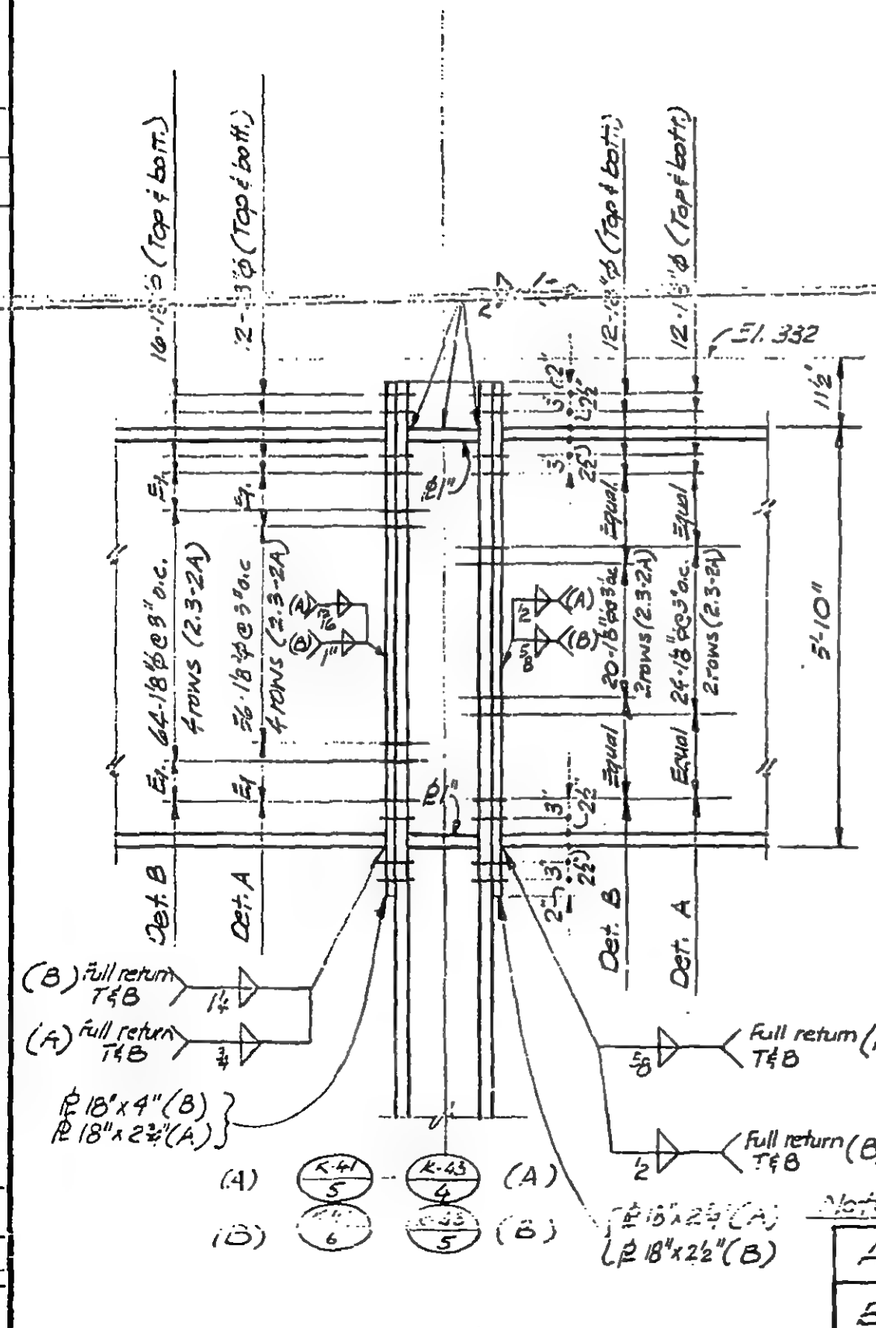

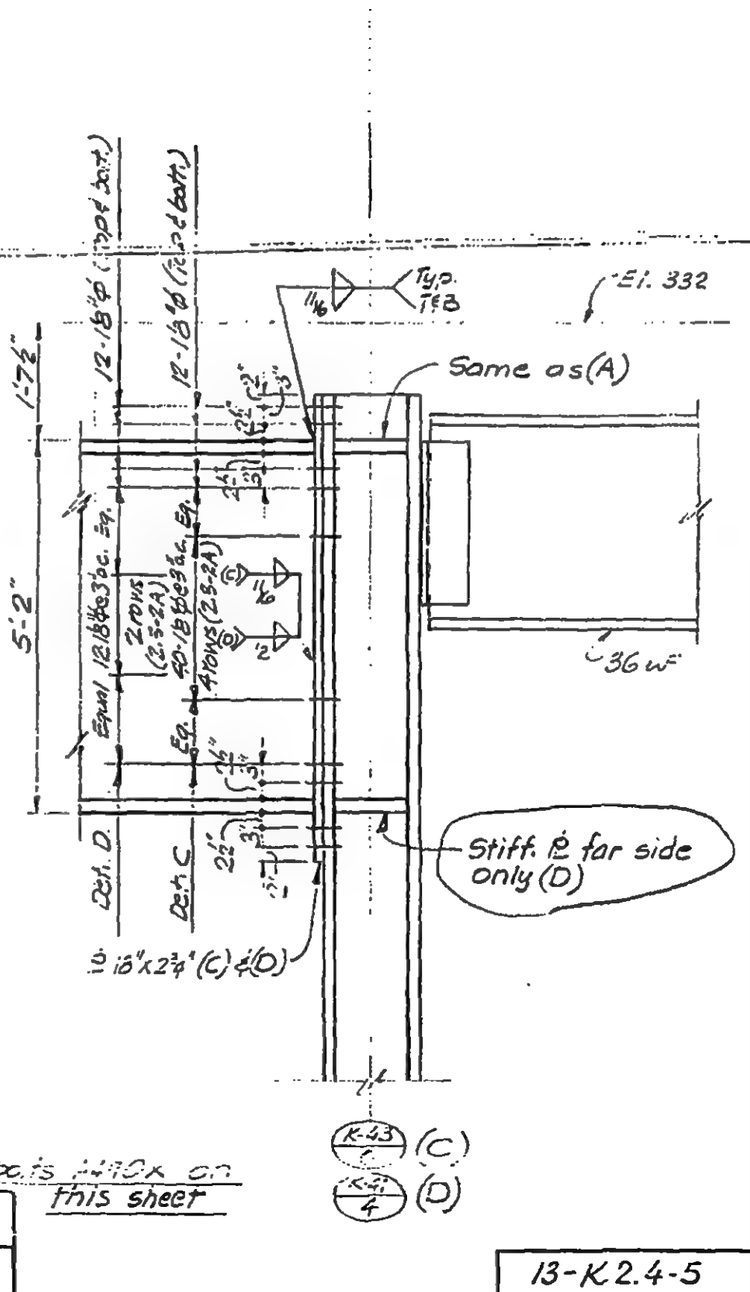

A	C
B	D

LICENSED PROFESSIONAL ENGINEER LESLIE E. ROBERTSON NO 34360 UNIVERSITY OF THE STATE OF NEW YORK

DESIGNED

DRAWN

REVIEWED

13-K 2.4-5

SKILLING, HELLE, CHRISTIANSEN, ROBERTSON — Structural & Civil Engineers

PROJECT: THE WORLD TRADE CENTER

TITLE: GIRDER COLUMN DETAILS

DATE: 11-3-72

REVISIONS

General Revision Released for construction 11-20-72

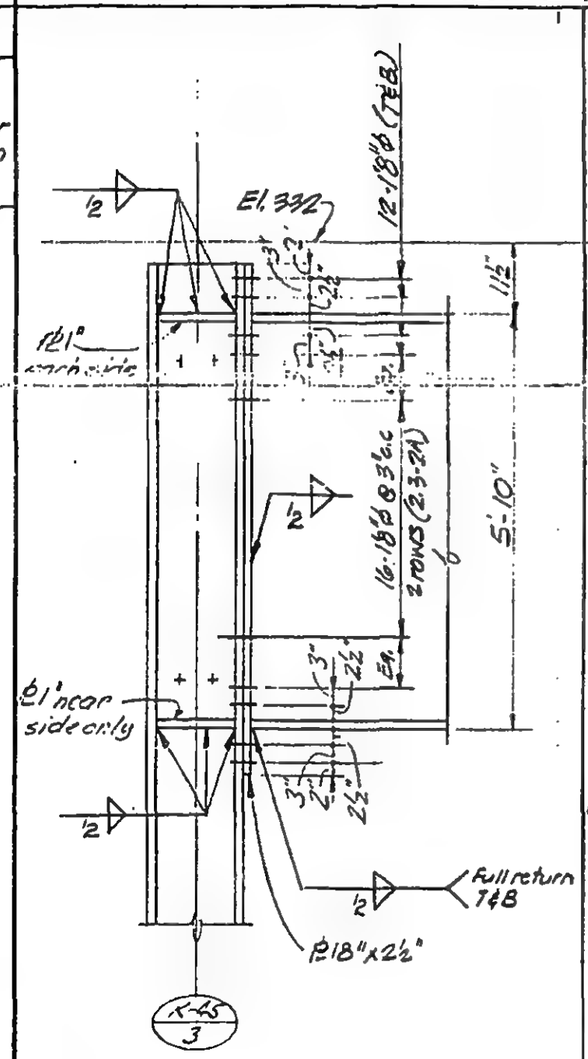

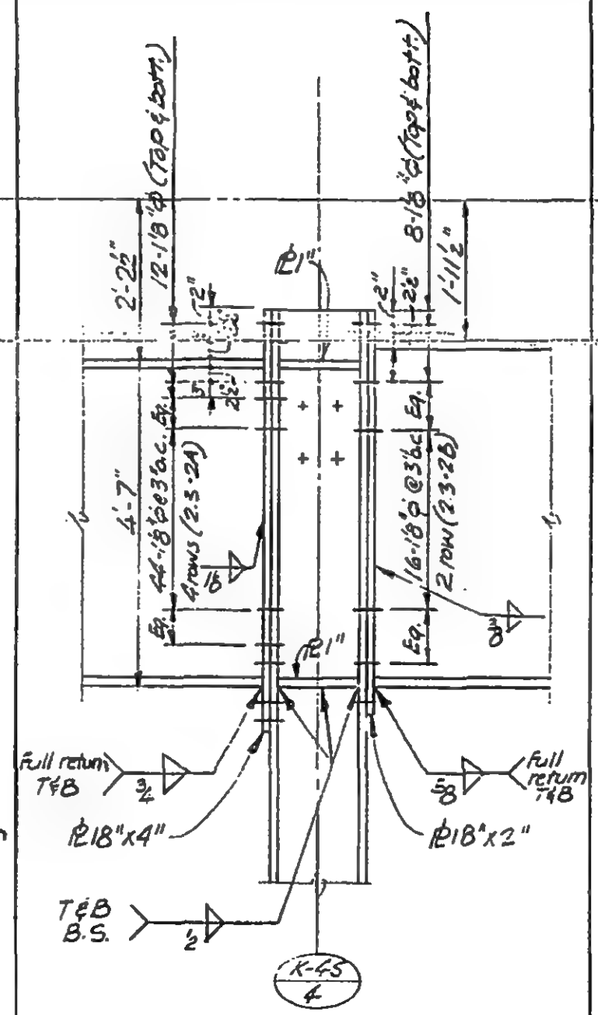

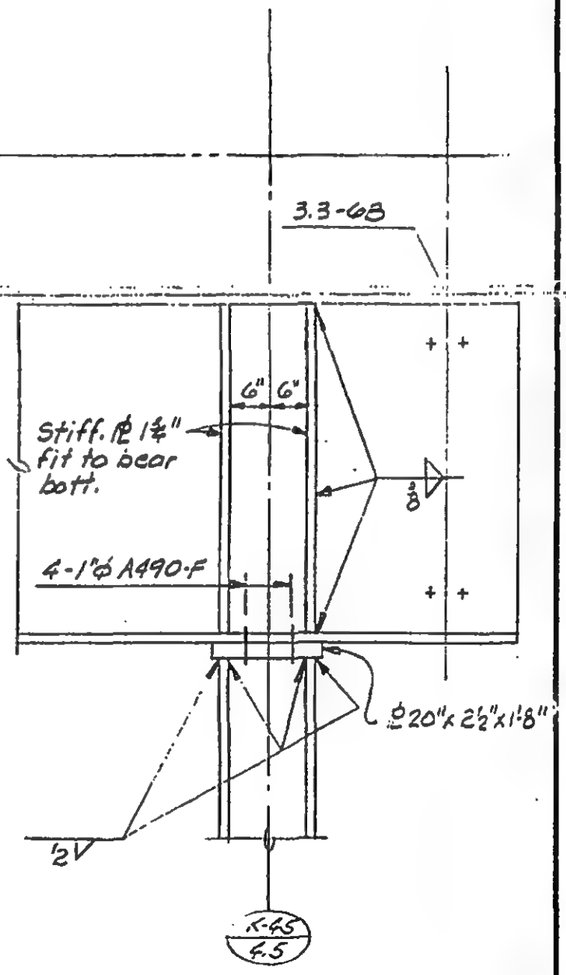

Note: All bolts to be A490x on this sheet

1043-L

LICENSED PROFESSIONAL ENGINEER
LESLIE E. ROBERTSON
No 34360
UNIVERSITY OF THE STATE OF NEW YORK

DESIGNED

SKILLING, HELLE, CHRISTIANSEN, ROBERTSON Structural & Civil Engineers

PROJECT THE WORLD TRADE CENTER | TITLE GIRDER COLUMN DETAILS | DATE 11-3-72

REVISIONS

RELEASED FOR CONSTRUCTION 11-20-72

2-5-73

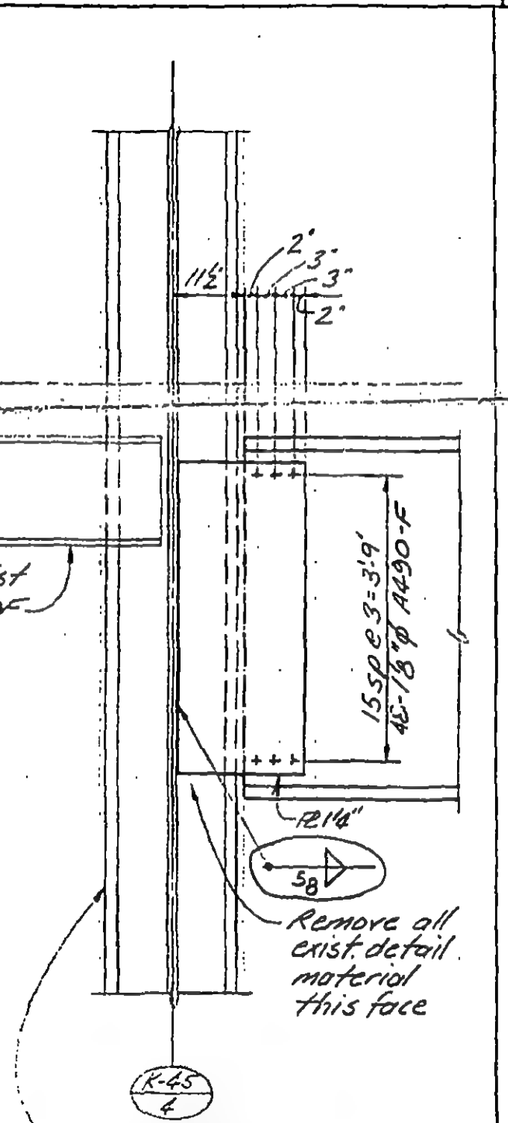

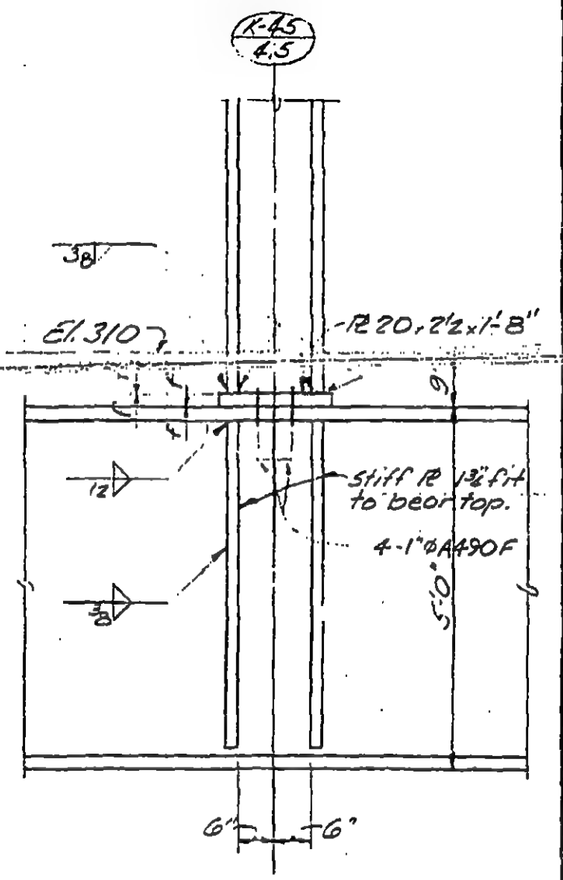

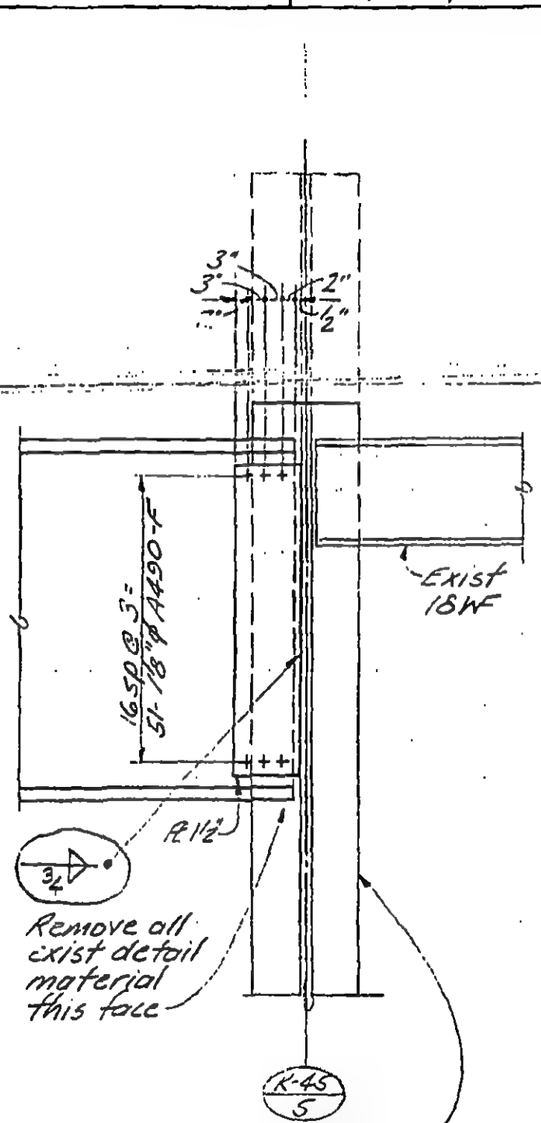

LICENSED PROFESSIONAL ENGINEER
LESLIE E. ROBERTSON
No 34360
UNIVERSITY OF THE STATE OF NEW YORK

DESIGNED

DRAWN

REVIEWED

A | B | C

13-K2.4-7

SKILLING, HELLE, CHRISTIANSEN, ROBERTSON — Structural & Civil Engineers

PROJECT: THE WORLD TRADE CENTER | TITLE: GIRDER COLUMN DETAILS | DATE: 11-3-72

REVISIONS

General Revision Released for construction 11-20-72

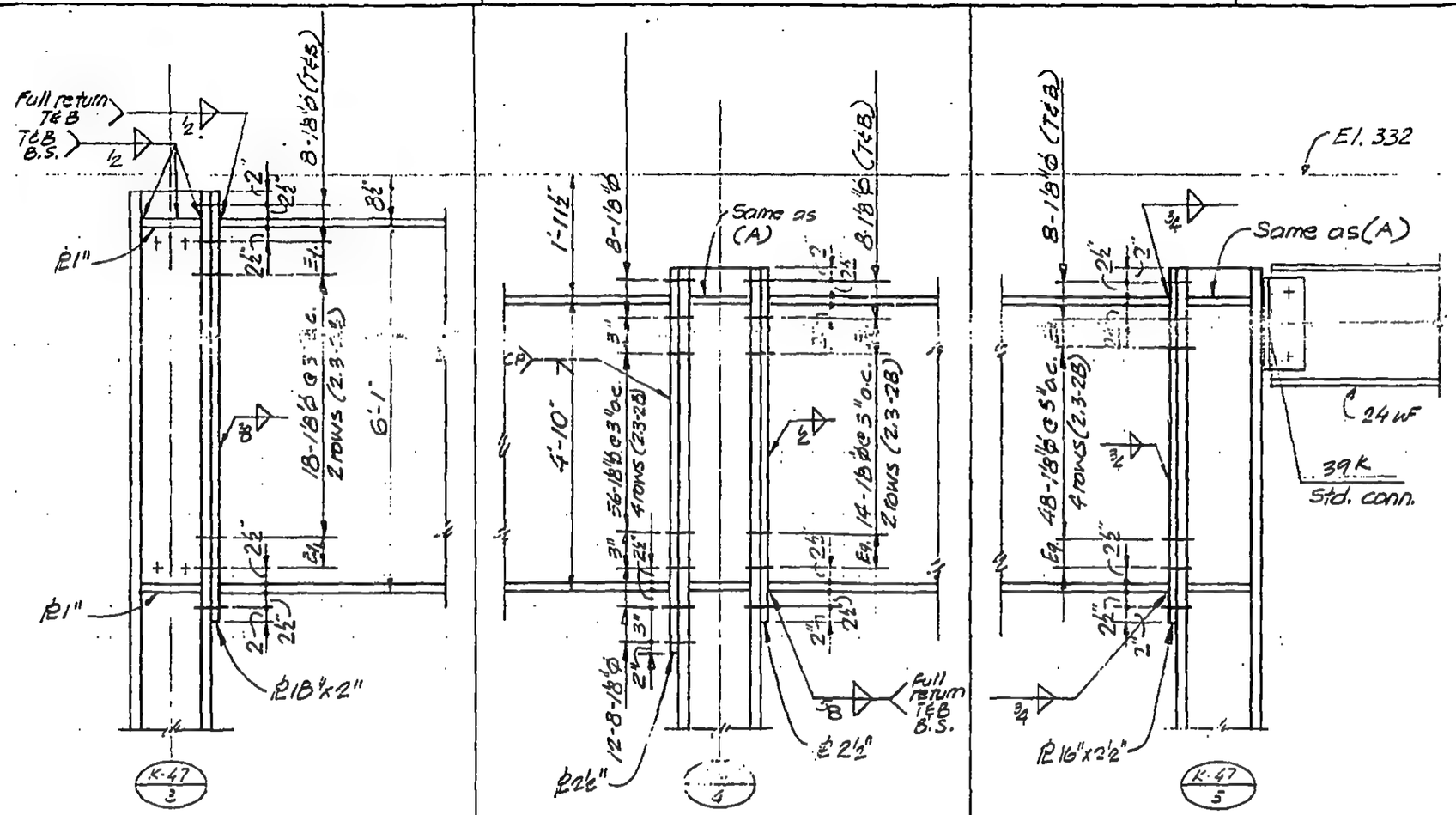

Note: All bolts A490X on this sheet

A | B | C

13-K2.4-8

LICENSED PROFESSIONAL ENGINEER LESLIE E. ROBERTSON No 34360 UNIVERSITY OF THE STATE OF NEW YORK

DESIGNED

DRAWN

REVIEWED

SKILLING, HELLE, CHRISTIANSEN, ROBERTSON — Structural & Civil Engineers

PROJECT THE WORLD TRADE CENTER | TITLE GIRDER COLUMN DETAILS | DATE 11-20-72

REVISIONS

Released for construction 11-20-72

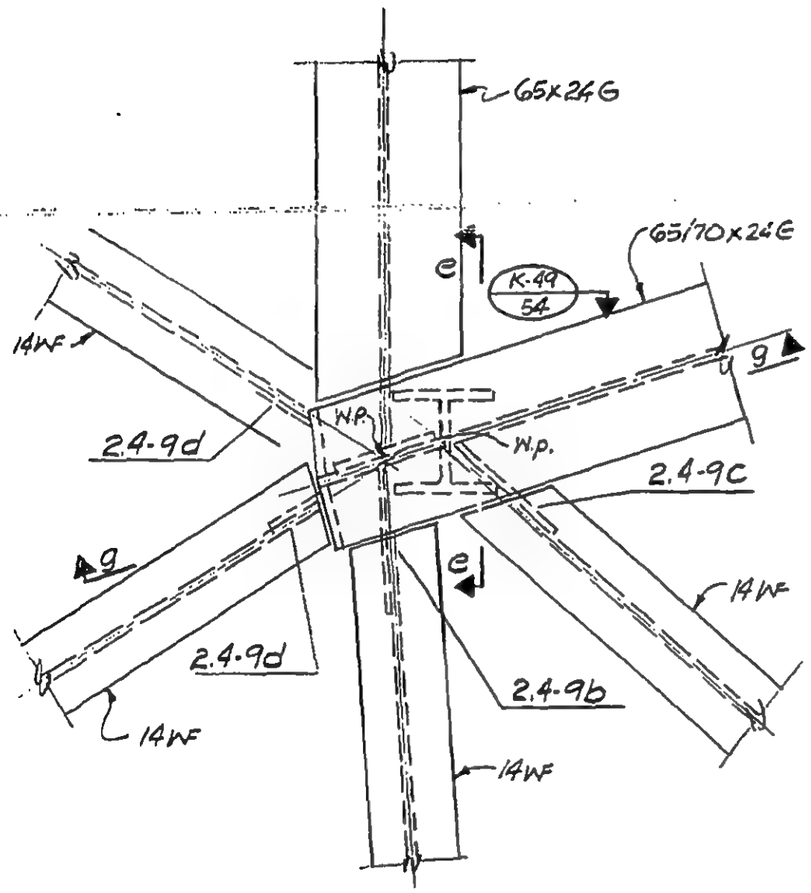

b

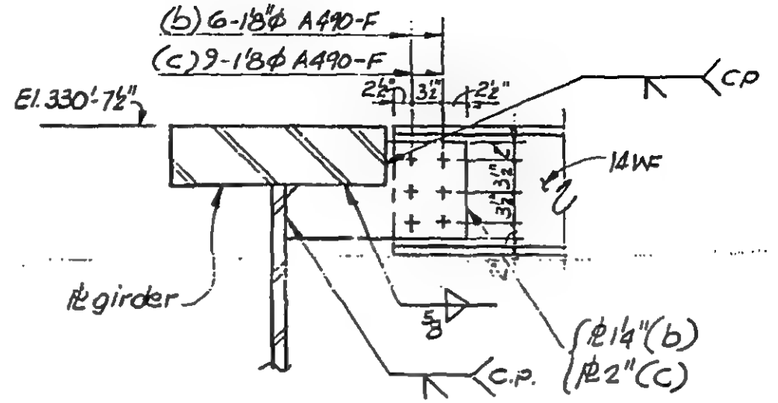

c

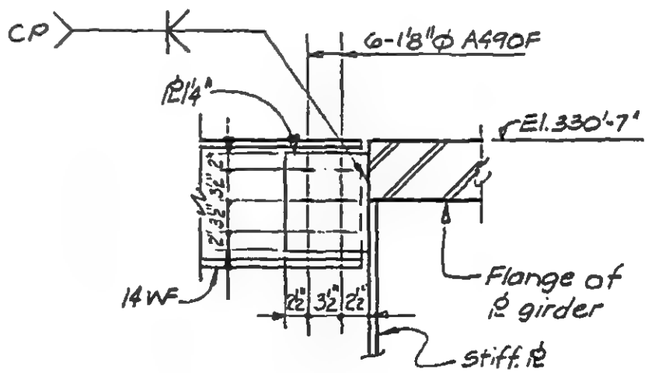

d

13-K2.4-9.1

LICENSED PROFESSIONAL ENGINEER
LESLIE E. ROBERTSON
No 34360
UNIVERSITY OF THE STATE OF NEW YORK

DESIGNED

DRAWN

REVIEWED

SKILLING, HELLE, CHRISTIANSEN, ROBERTSON — Structural & Civil Engineers

PROJECT THE WORLD TRADE CENTER | TITLE GIRDER COLUMN DETAILS | DATE 11-3-72

REVISIONS

Released for construction 11-20-72

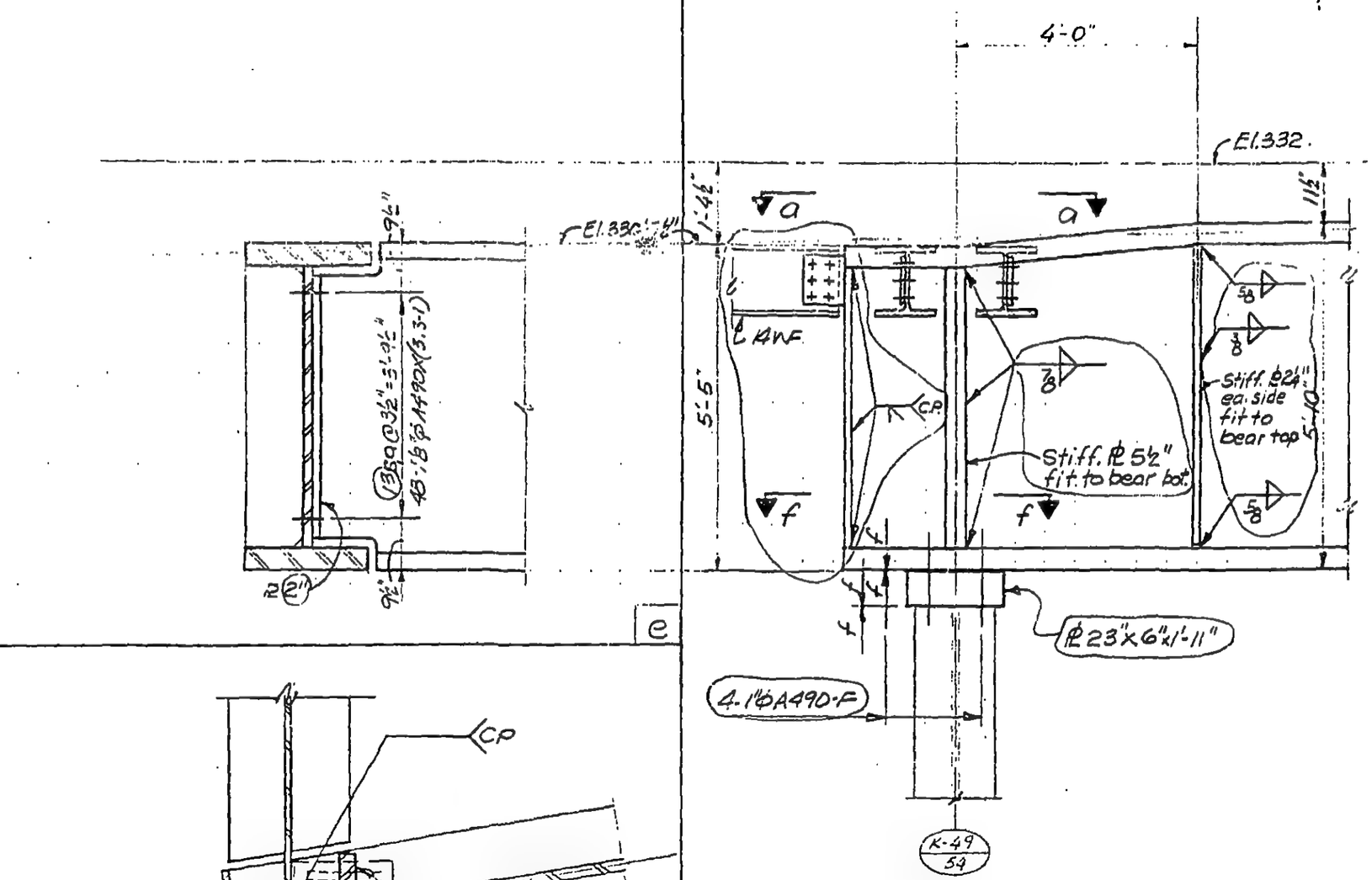

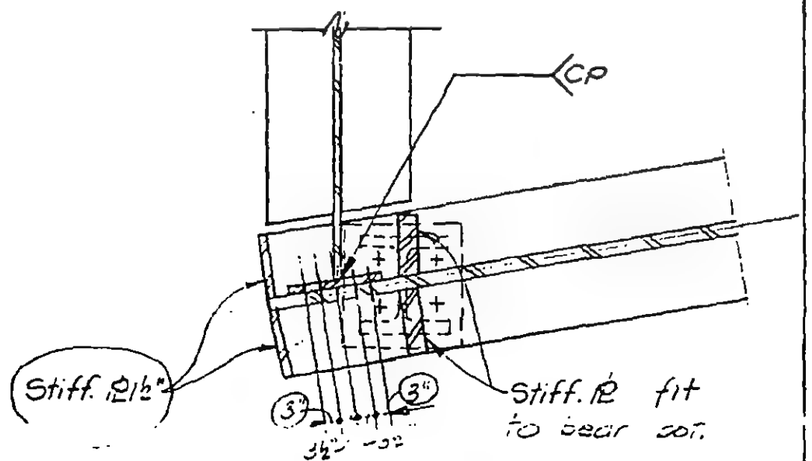

f g

LICENSED PROFESSIONAL ENGINEER LESLIE E. ROBERTSON No 34360 UNIVERSITY OF THE STATE OF NEW YORK

DESIGNED

DRAWN

REVIEWED

13-K2.4-9(2)

SKILLING, HELLE, CHRISTIANSEN, ROBERTSON — Structural & Civil Engineers

PROJECT: THE WORLD TRADE CENTER | TITLE: GIRDER COLUMN DETAIL | DATE: 11-3-72

REVISIONS

General Revision Released for construction 11-20-72

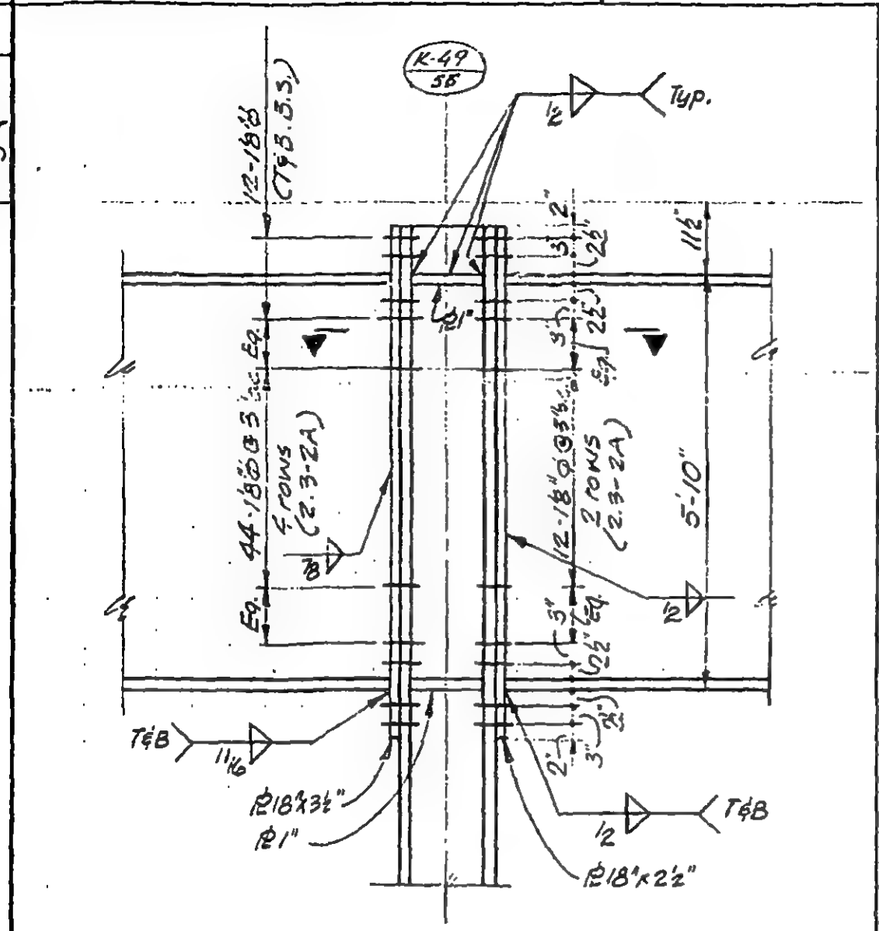

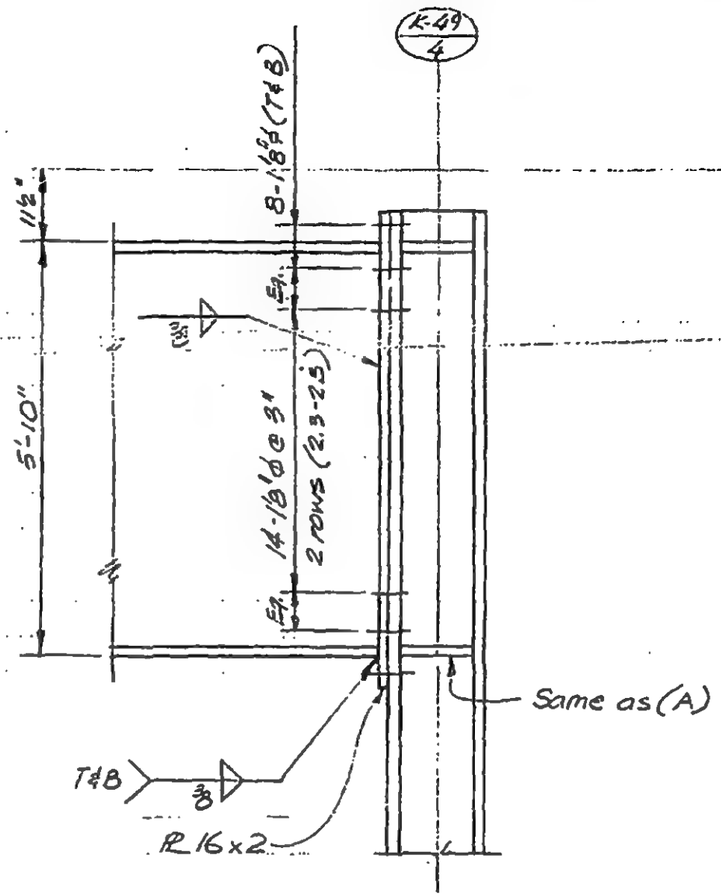

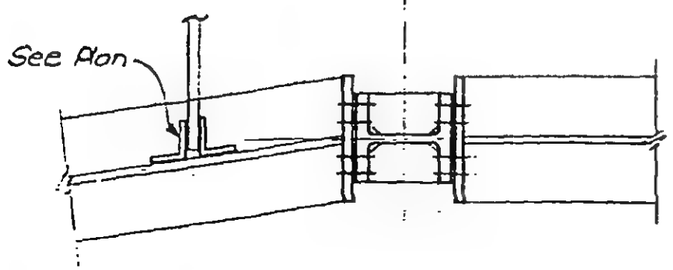

Note: All bolts A490X or high strength.

LICENSED PROFESSIONAL ENGINEER — LESLIE E. ROBERTSON — No 34360 — UNIVERSITY OF THE STATE OF NEW YORK

DESIGNED

DRAWN John Gioiosa

REVIEWED

A | B

13-K2.4-10

SKILLING, HELLE, CHRISTIANSEN, ROBERTSON — Structural & Civil Engineers

PROJECT: THE WORLD TRADE CENTER | TITLE: GIRDER COLUMN DETAILS | DATE: 11-3-72

REVISIONS

Released for construction 11-20-72

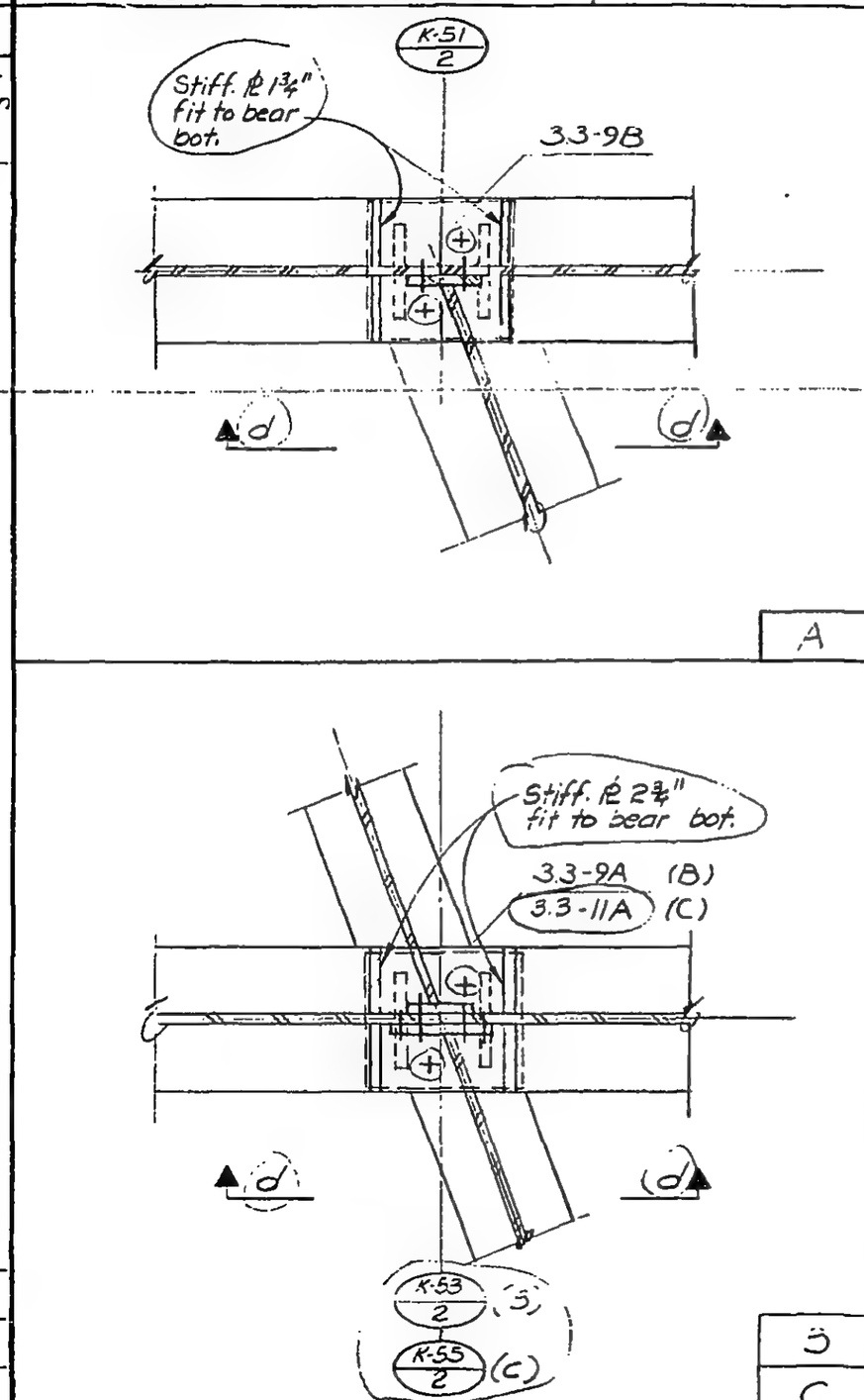

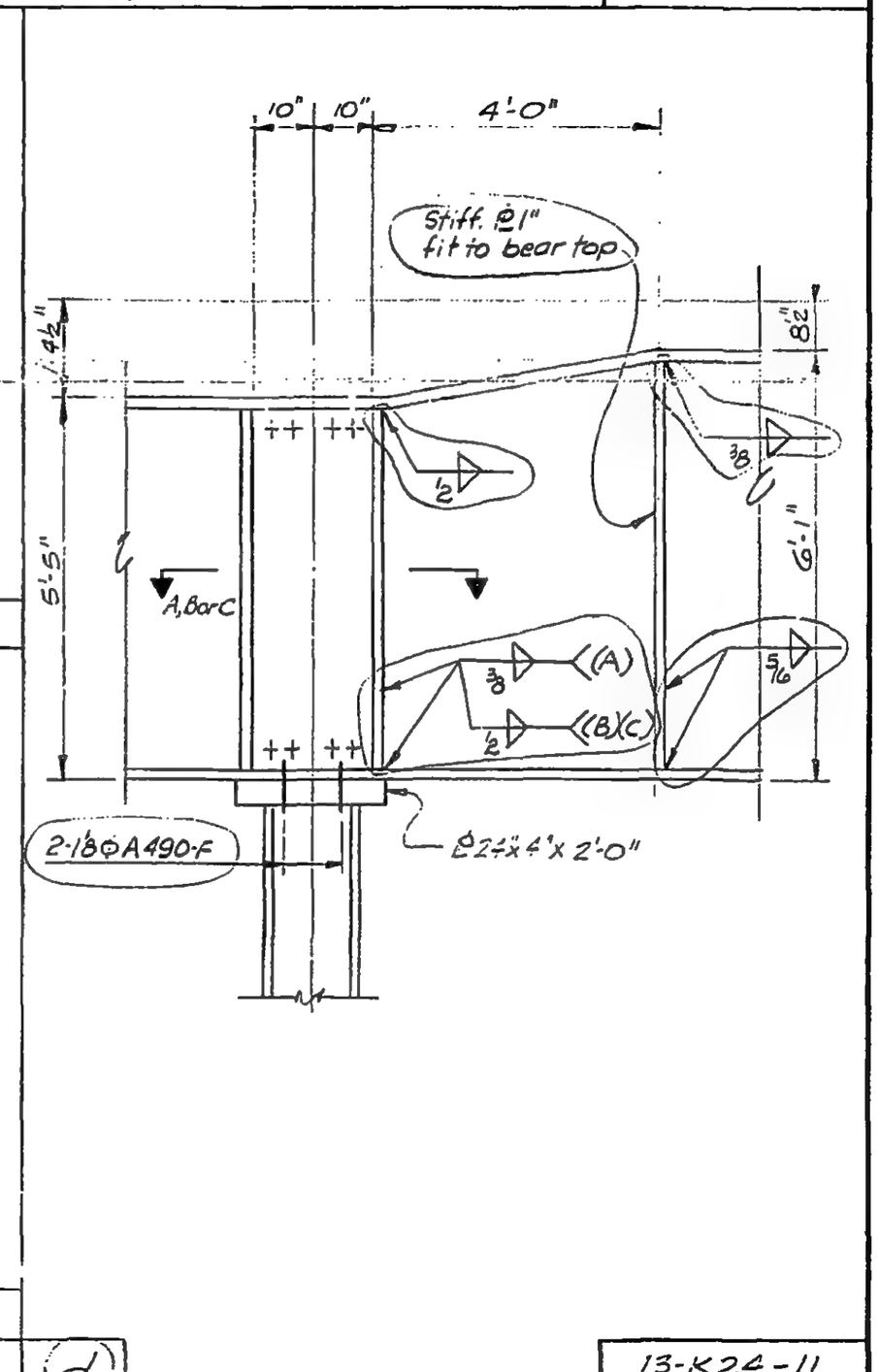

13-K2.4-11

LICENSED PROFESSIONAL ENGINEER LESLIE E. ROBERTSON No 34360 UNIVERSITY OF THE STATE OF NEW YORK

DESIGNED

DRAWN

REVIEWED

SKILLING, HELLE, CHRISTIANSEN, ROBERTSON — Structural & Civil Engineers

PROJECT: THE WORLD TRADE CENTER | TITLE: GIRDER COLUMN DETAILS | DATE: 11-3-72

REVISIONS

General Revision
Release for construction
11-20-72

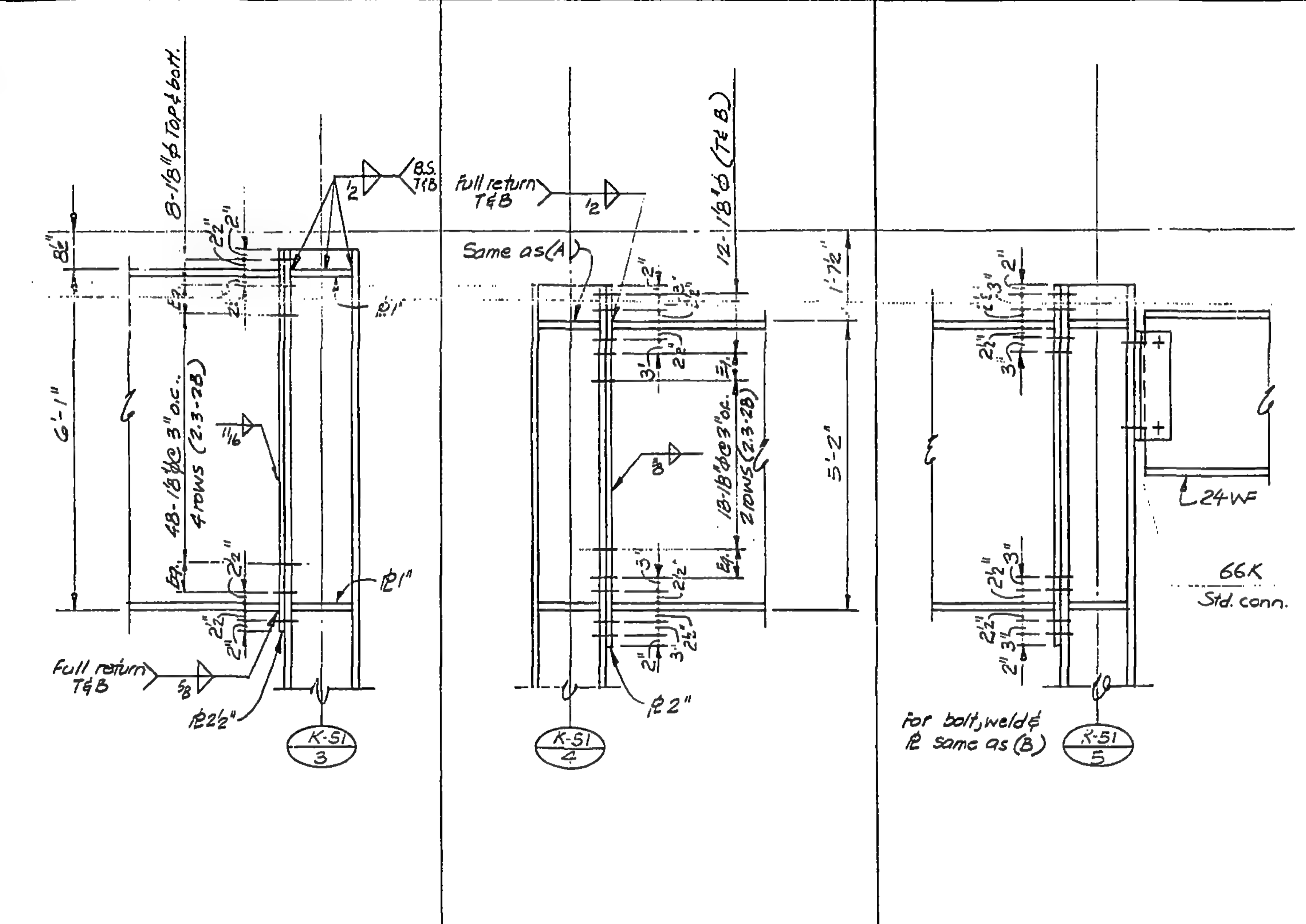

Note: All bolts A490X on this sheet

LICENSED PROFESSIONAL ENGINEER · LESLIE E. ROBERTSON · No 34360 · UNIVERSITY OF THE STATE OF NEW YORK

DESIGNED

DRAWN

REVIEWED

A | B | C

15-K24-12

SKILLING, HELLE, CHRISTIANSEN, ROBERTSON — Structural & Civil Engineers

PROJECT: THE WORLD TRADE CENTER

TITLE: GIRDER COLUMN DETAILS

DATE: 11-3-72

REVISIONS

General Revision Release for construction 11-20-72

4-20-73

Note: All bolts A490x on this sheet

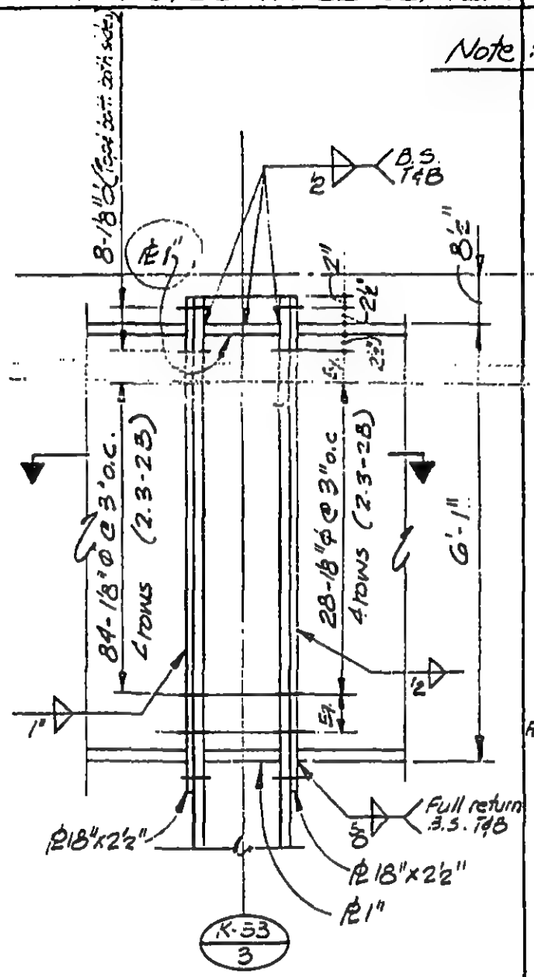

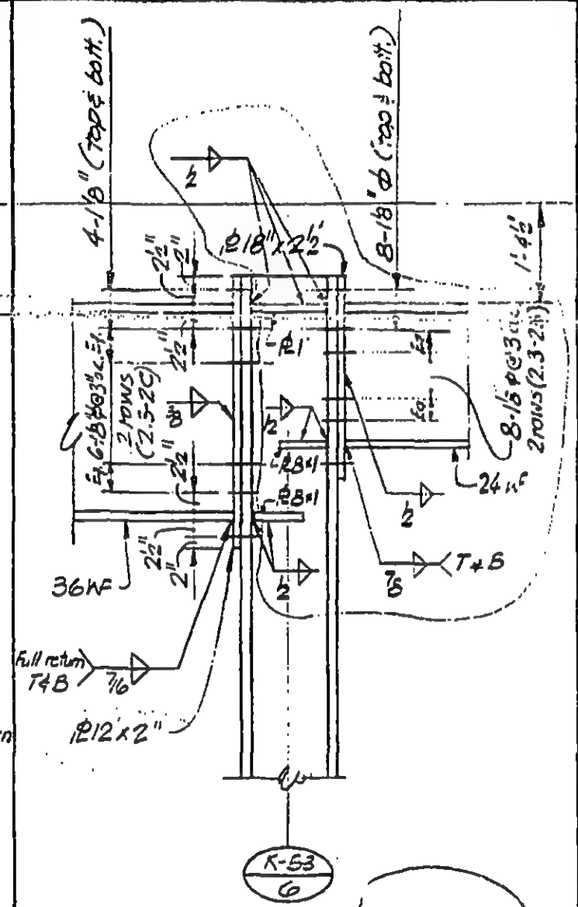

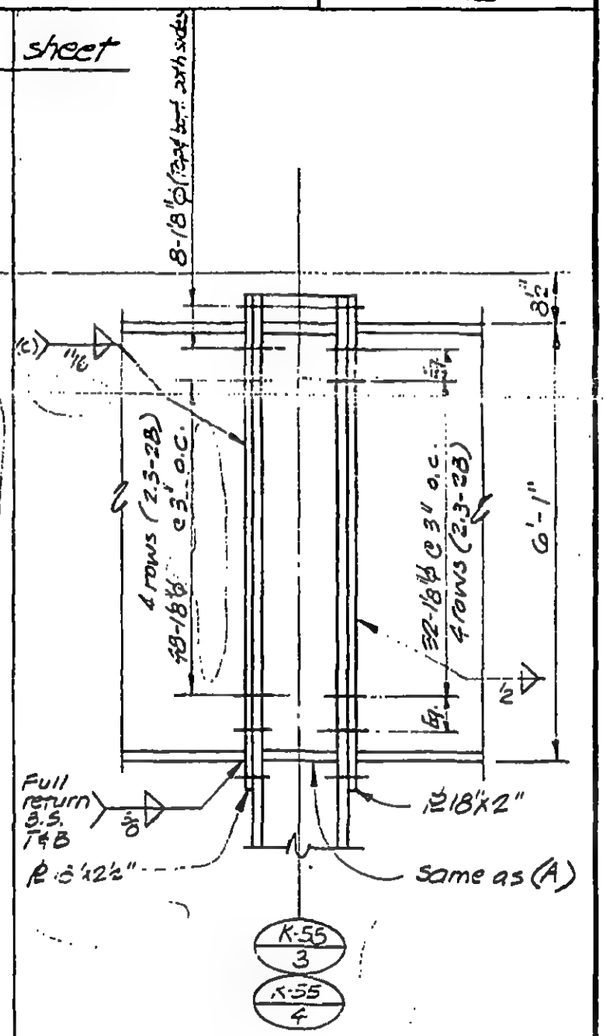

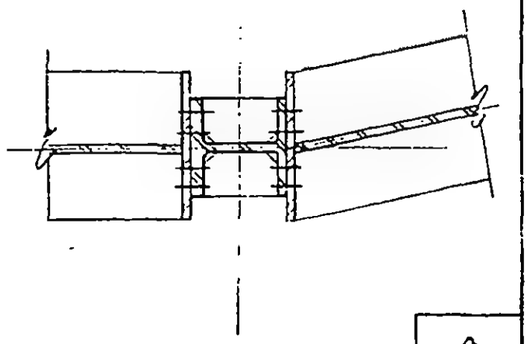

A | B | C

15-K2.4-13

LICENSED PROFESSIONAL ENGINEER LESLIE E. ROBERTSON NO 34360 UNIVERSITY OF THE STATE OF NEW YORK

DESIGNED K. Chiang

DRAWN

REVIEWED

SKILLING, HELLE, CHRISTIANSEN, ROBERTSON — Structural & Civil Engineers

PROJECT: THE WORLD TRADE CENTER | TITLE: GIRDER COLUMNS DETAILS | DATE: 11-3-72

REVISIONS

RELEASE FOR CONSTRUCTION 11-20-72

4-20-73

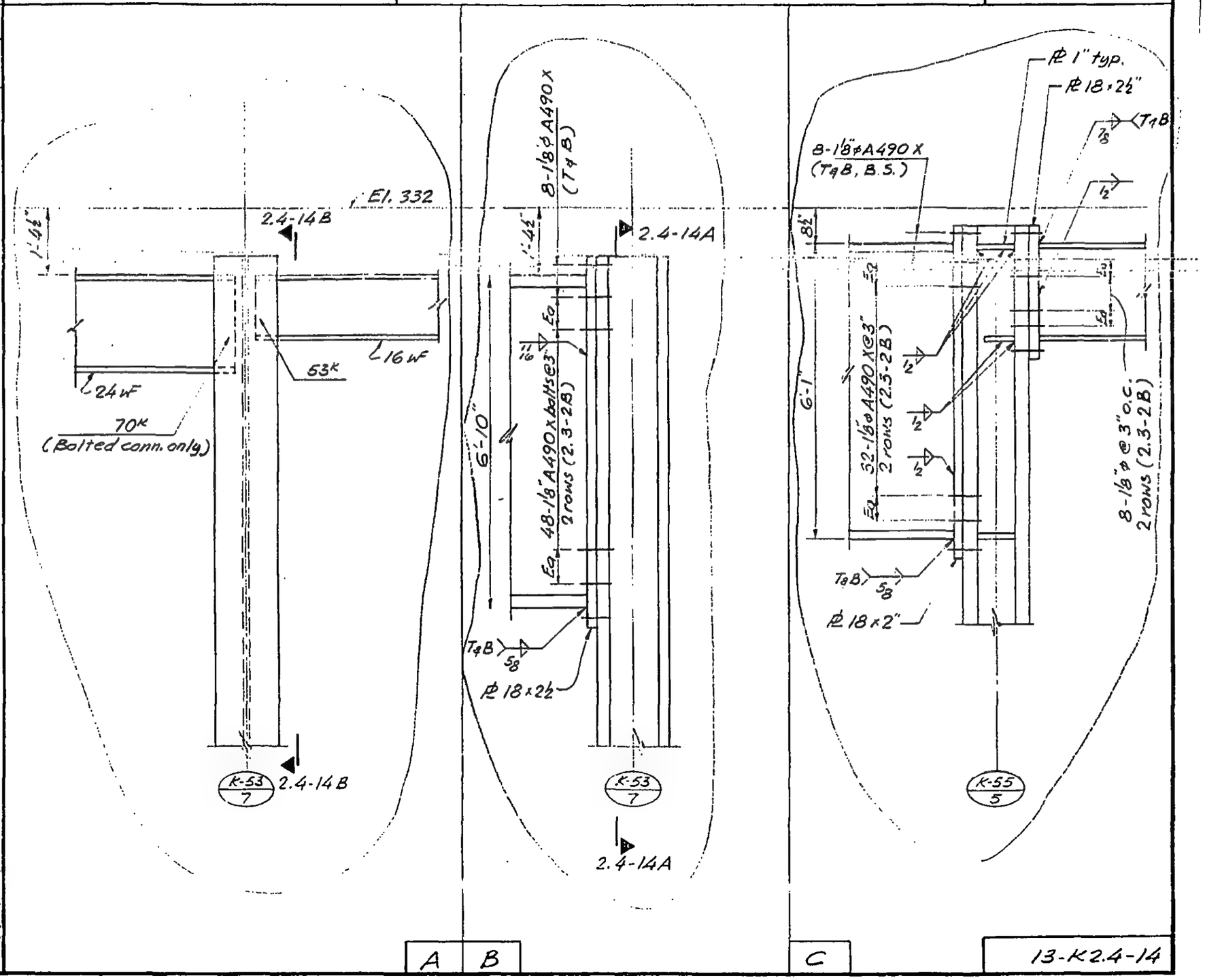

LICENSED PROFESSIONAL ENGINEER — LESLIE E. ROBERTSON — NO 34360 — UNIVERSITY OF THE STATE OF NEW YORK

DESIGNED K. Chiang

DRAWN

REVIEWED

13-K2.4-14

SKILLING, HELLE, CHRISTIANSEN, ROBERTSON — Structural & Civil Engineers

PROJECT: THE WORLD TRADE CENTER | TITLE: GIRDER COLUMN DETAILS | DATE: 11-20-72

REVISIONS

Released for construction 11-20-72

12-11-72

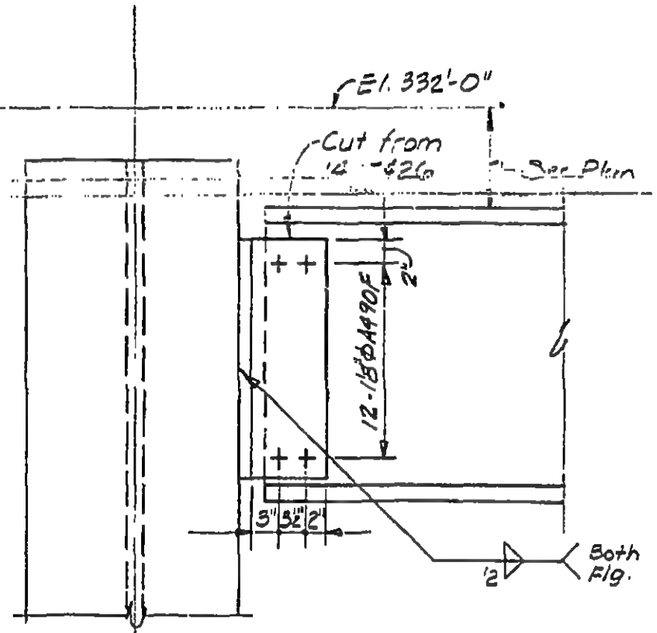

K-35 / 6
K-37 / 6
See 9.1-1D

K-41 / 6
K-43 / 5
See 9.1-1C

K-51 / 3
K-53 / 3
See 9.1-2

K-43 / 6
See 9.1-1A

LICENSED PROFESSIONAL ENGINEER — LESLIE E. ROBERTSON — No 34360 — UNIVERSITY OF THE STATE OF NEW YORK

DESIGNED

DRAWN

REVIEWED

13-K2.4-15

SKILLING, HELLE, CHRISTIANSEN, ROBERTSON — Structural & Civil Engineers

PROJECT THE WORLD TRADE CENTER | TITLE GIRDER COLUMN DETAIL | DATE 4-20-73

REVISIONS

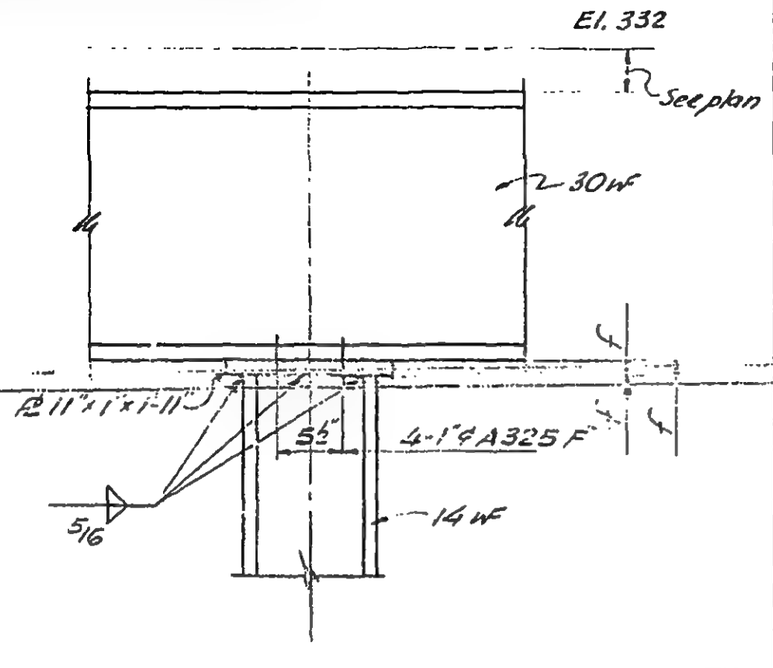

A

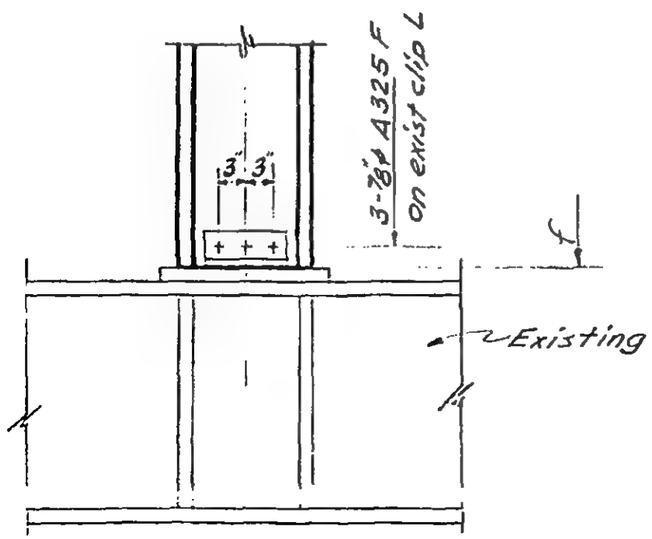

B

LICENSED PROFESSIONAL ENGINEER
LESLIE E. ROBERTSON
No 34360
UNIVERSITY OF THE STATE OF NEW YORK

DESIGNED

DRAWN

REVIEWED

13-K2.4-16

SKILLING, HELLE, CHRISTIANSEN, ROBERTSON — Structural & Civil Engineers

PROJECT THE WORLD TRADE CENTER | TITLE GIRDER-FUTURE COLUMN DETAILS | DATE 11-3-72

REVISIONS

RELEASE FOR CONSTRUCTION 11-20-72

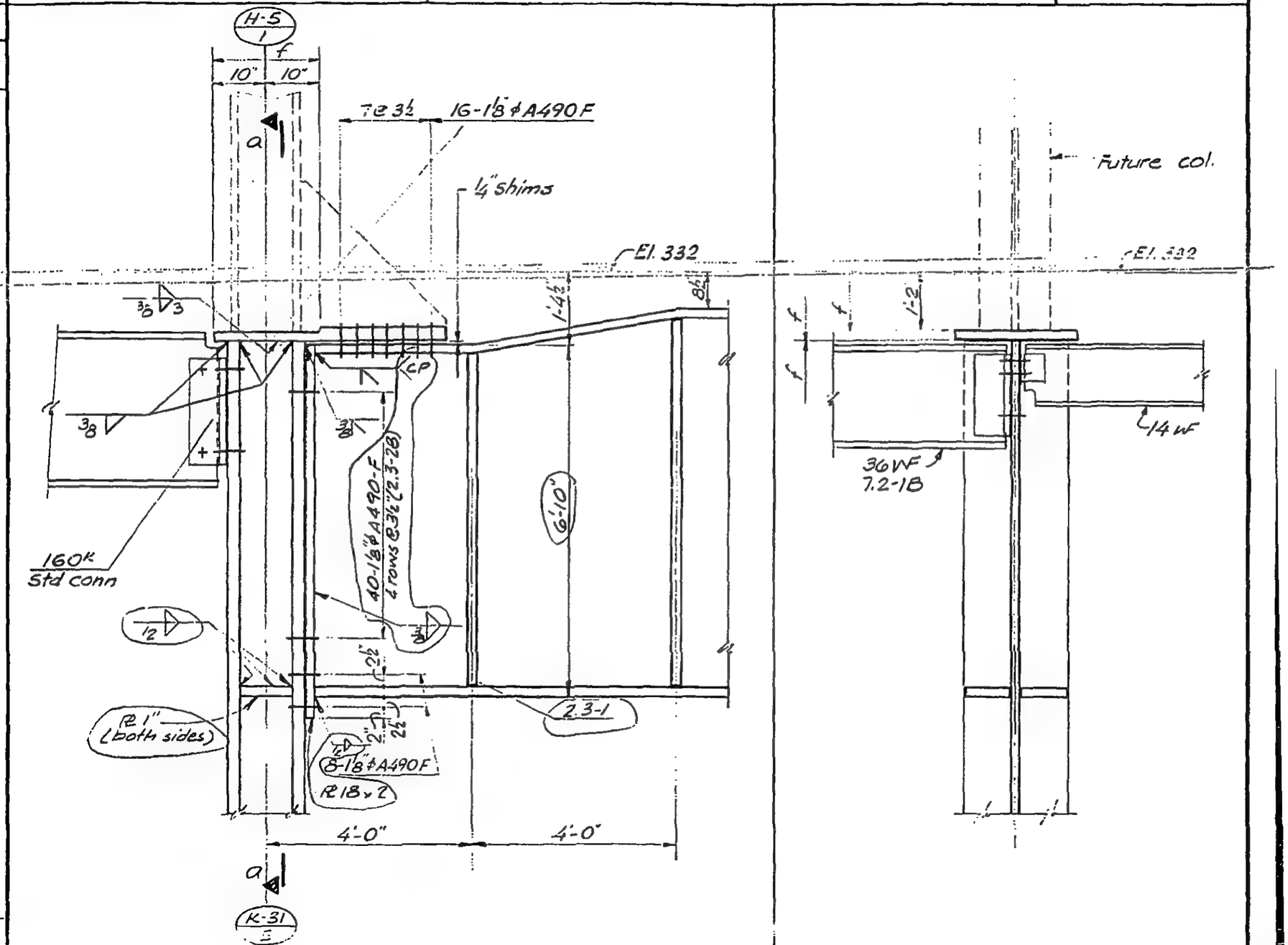

LICENSED PROFESSIONAL ENGINEER
LESLIE E. ROBERTSON
No 34360
UNIVERSITY OF THE STATE OF NEW YORK

DESIGNED

DRAWN John Quinn

REVIEWED

A | a

13-K2.5-1

SKILLING, HELLE, CHRISTIANSEN, ROBERTSON — Structural & Civil Engineers

PROJECT: THE WORLD TRADE CENTER | TITLE: GIRDER - FUTURE COLUMN DETAILS | DATE: 1-3-72

REVISIONS

RELEASE FOR CONSTRUCTION 11-20-72

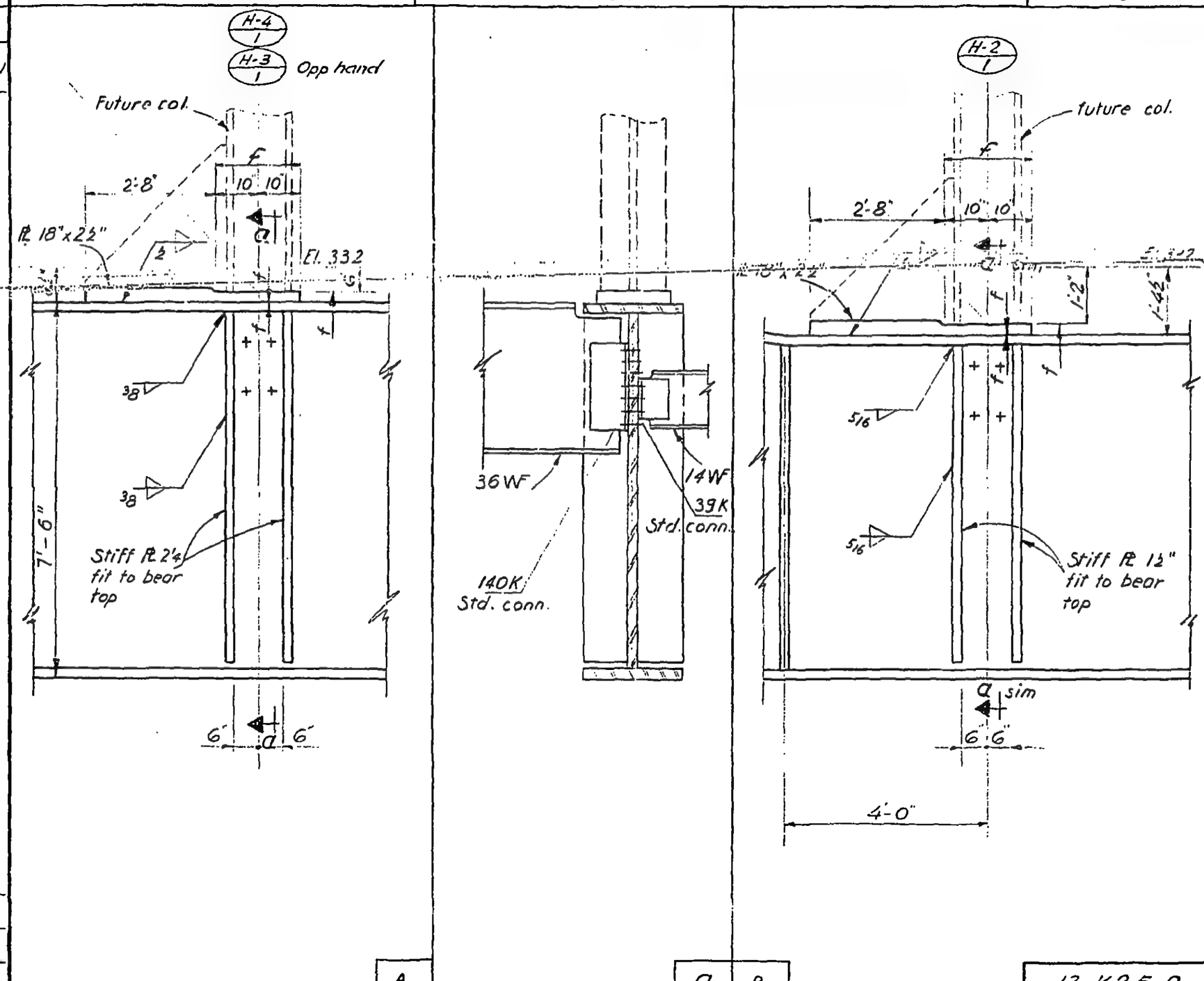

LICENSED PROFESSIONAL ENGINEER LESLIE E. ROBERTSON No 34360 UNIVERSITY OF THE STATE OF NEW YORK

DESIGNED

DRAWN

REVIEWED

13-K2.5-2

SKILLING, HELLE, CHRISTIANSEN, ROBERTSON — Structural & Civil Engineers

PROJECT THE WORLD TRADE CENTER | TITLE GIRDER - FUTURE COLUMN DETAILS | DATE 11-3-72

REVISIONS

RELEASE FOR CONSTRUCTION 11-20-72

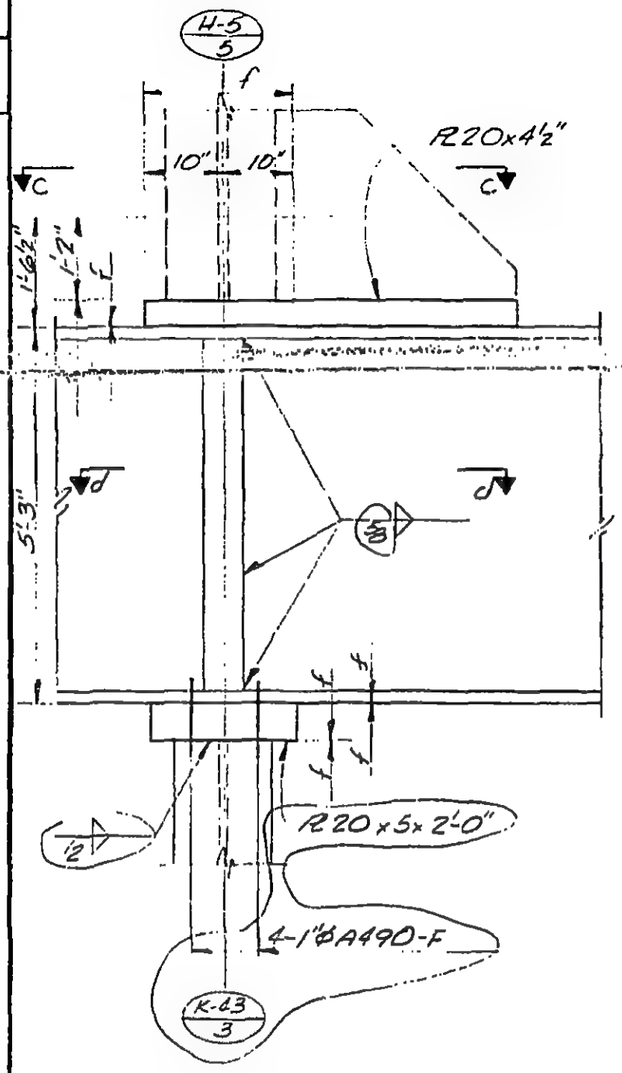

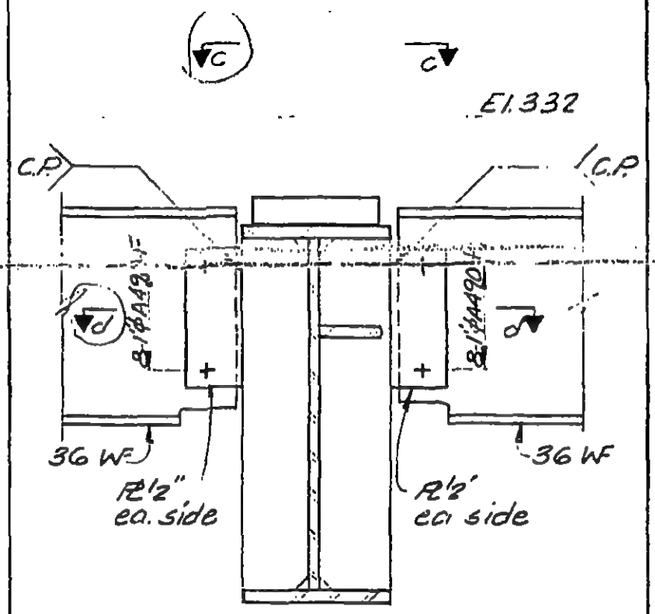

a

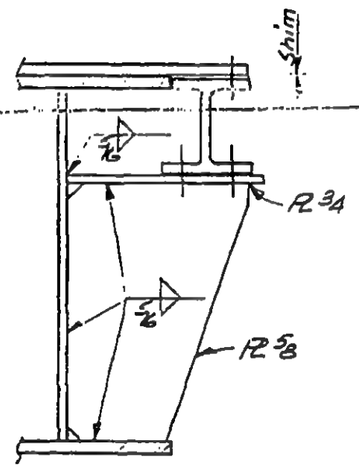

b

13-K2.5-3.1

LICENSED PROFESSIONAL ENGINEER
LESLIE E. ROBERTSON
No 34360
UNIVERSITY OF THE STATE OF NEW YORK

DESIGNED

DRAWN TK

REVIEWED

SKILLING, HELLE, CHRISTIANSEN, ROBERTSON — Structural & Civil Engineers

PROJECT THE WORLD TRADE CENTER | TITLE GIRDER - FUTURE COLUMN DETAILS | DATE 11-3-72

REVISIONS

RELEASE FOR CONSTRUCTION 11-20-72

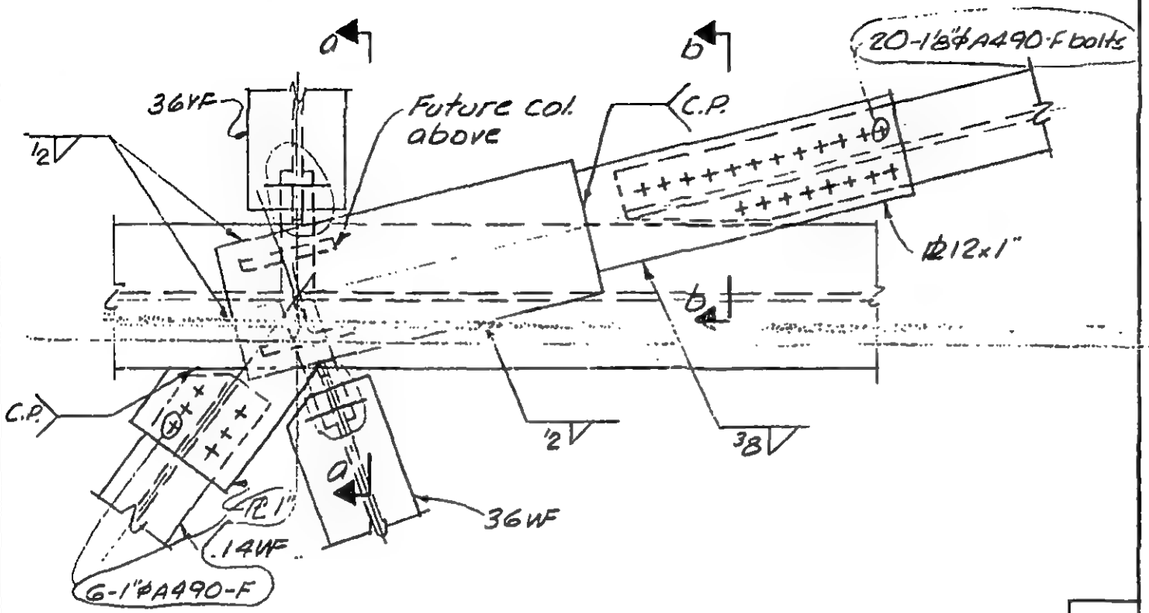

c

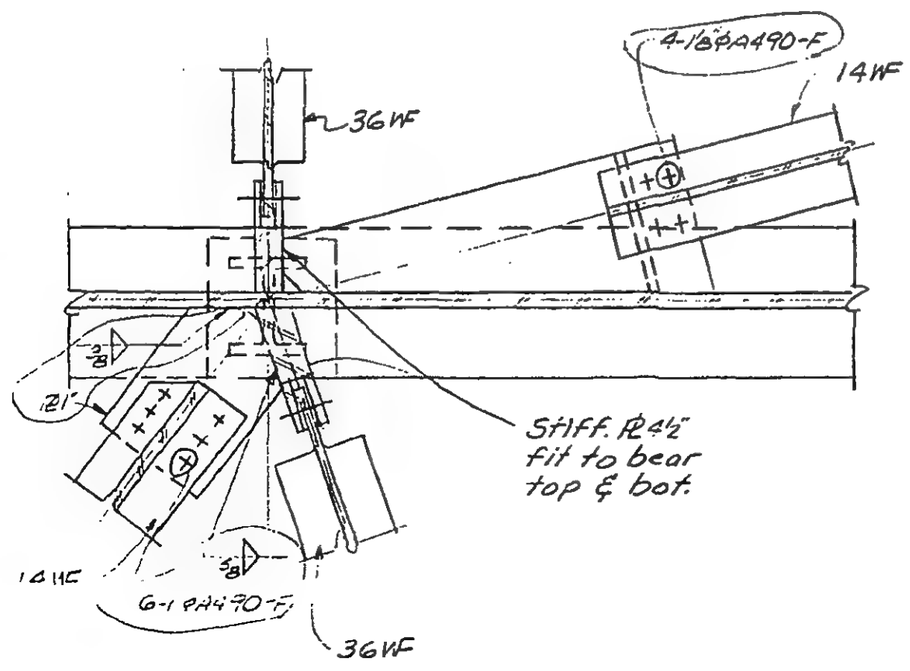

d

LICENSED PROFESSIONAL ENGINEER
LESLIE E. ROBERTSON
NO 34360
UNIVERSITY OF THE STATE OF NEW YORK

DESIGNED

DRAWN A.L. Fransui

REVIEWED

13-K2.5-3.2

SKILLING, HELLE, CHRISTIANSEN, ROBERTSON — Structural & Civil Engineers

PROJECT: THE WORLD TRADE CENTER | TITLE: GIRDER - FUTURE COLUMN DETAILS | DATE: 11-3-72

REVISIONS

RELEASE FOR CONSTRUCTION 11-20-72

6-20-73

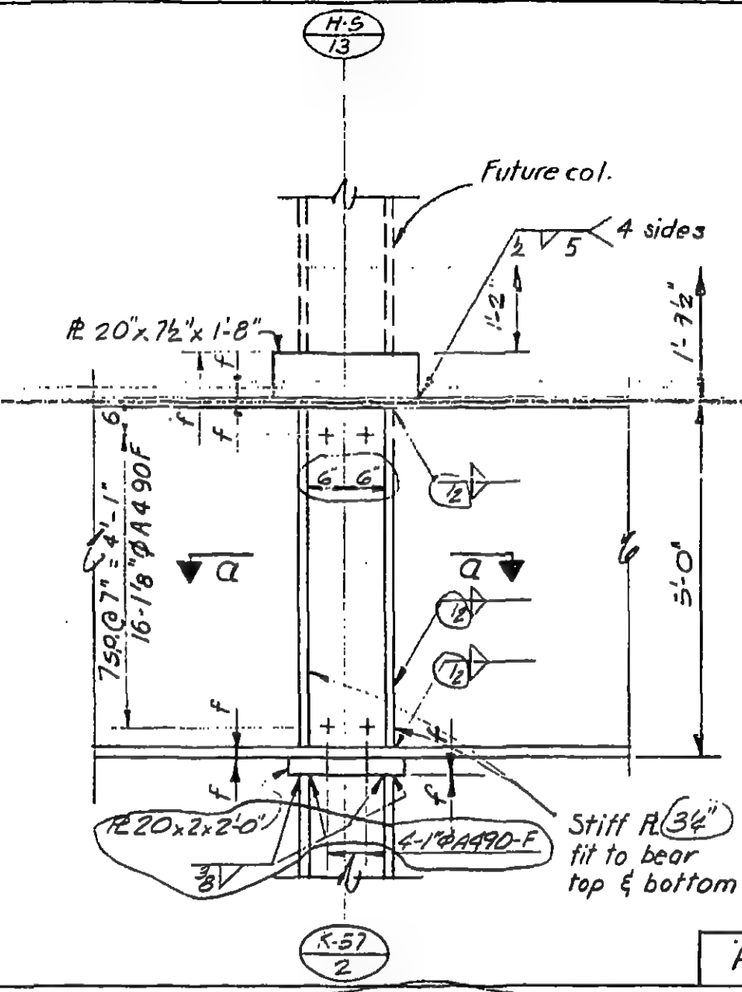

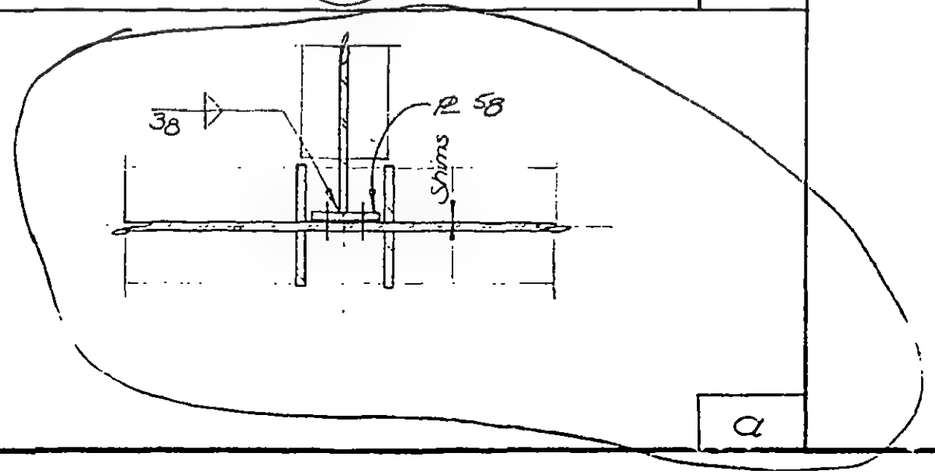

LICENSED PROFESSIONAL ENGINEER
LESLIE E. ROBERTSON
No 34360
UNIVERSITY OF THE STATE OF NEW YORK

DESIGNED

DRAWN

REVIEWED

13-K2.5-4

SKILLING, HELLE, CHRISTIANSEN, ROBERTSON — Structural & Civil Engineers

PROJECT THE WORLD TRADE CENTER | TITLE GIRDER - FUTURE COLUMN DETAILS | DATE 11-3-73

REVISIONS
General Revision Released for Construction 11-20-72
12-11-72
4-20-73
6-20-73

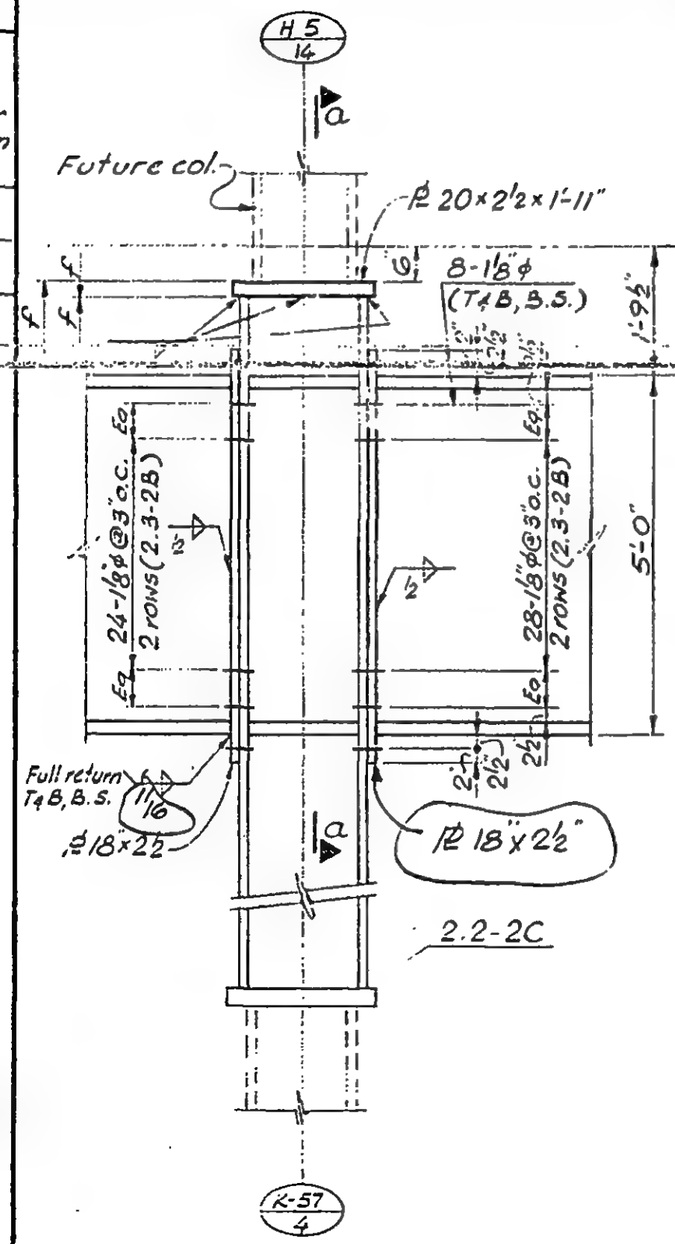

Note.

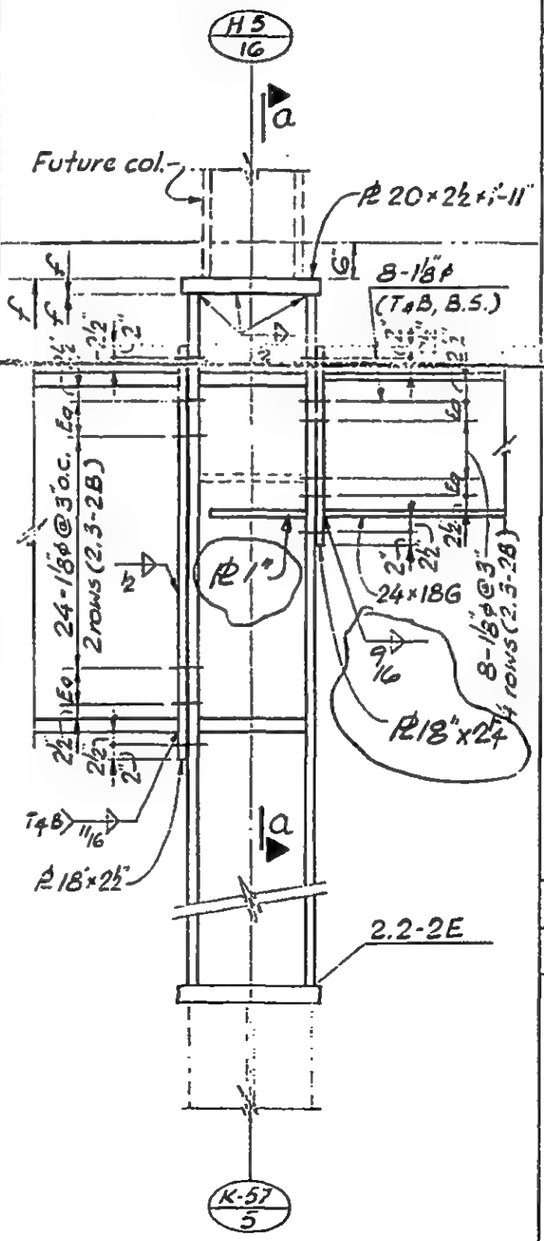

Note.

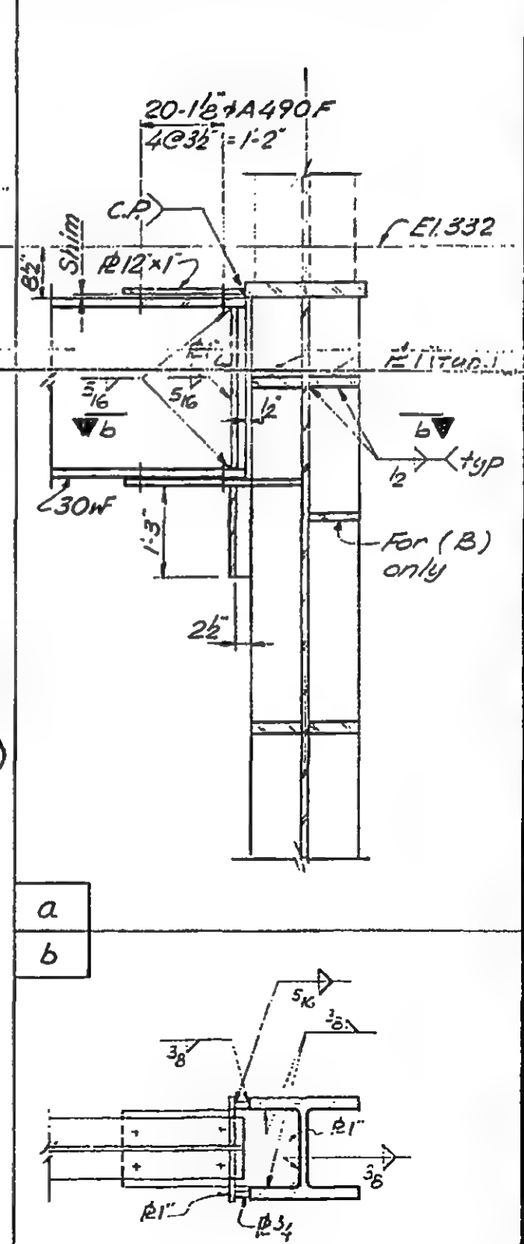

LICENSED PROFESSIONAL ENGINEER — LESLIE E. ROBERTSON — No. 34360 — UNIVERSITY OF THE STATE OF NEW YORK

DESIGNED

SKILLING, HELLE, CHRISTIANSEN, ROBERTSON — Structural & Civil Engineers

PROJECT: THE WORLD TRADE CENTER | TITLE: GIRDER FUTURE COLUMN DETAILS | DATE: 11-3-72

REVISIONS

Released for construction 11-20-72

4-20-73

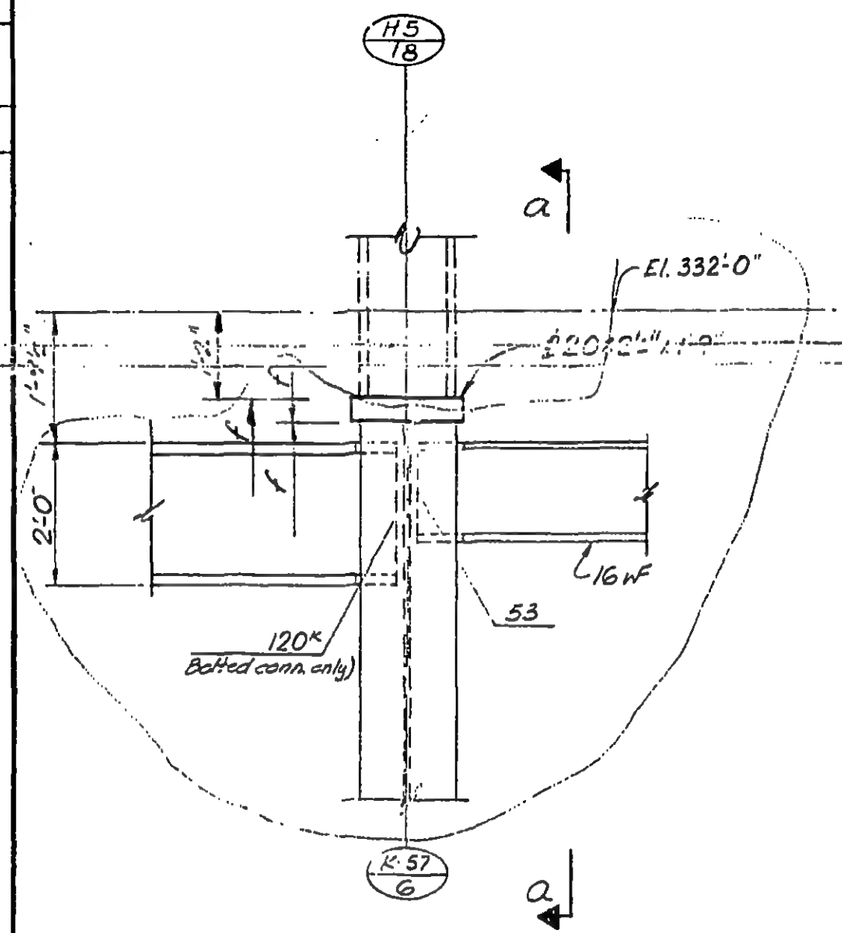

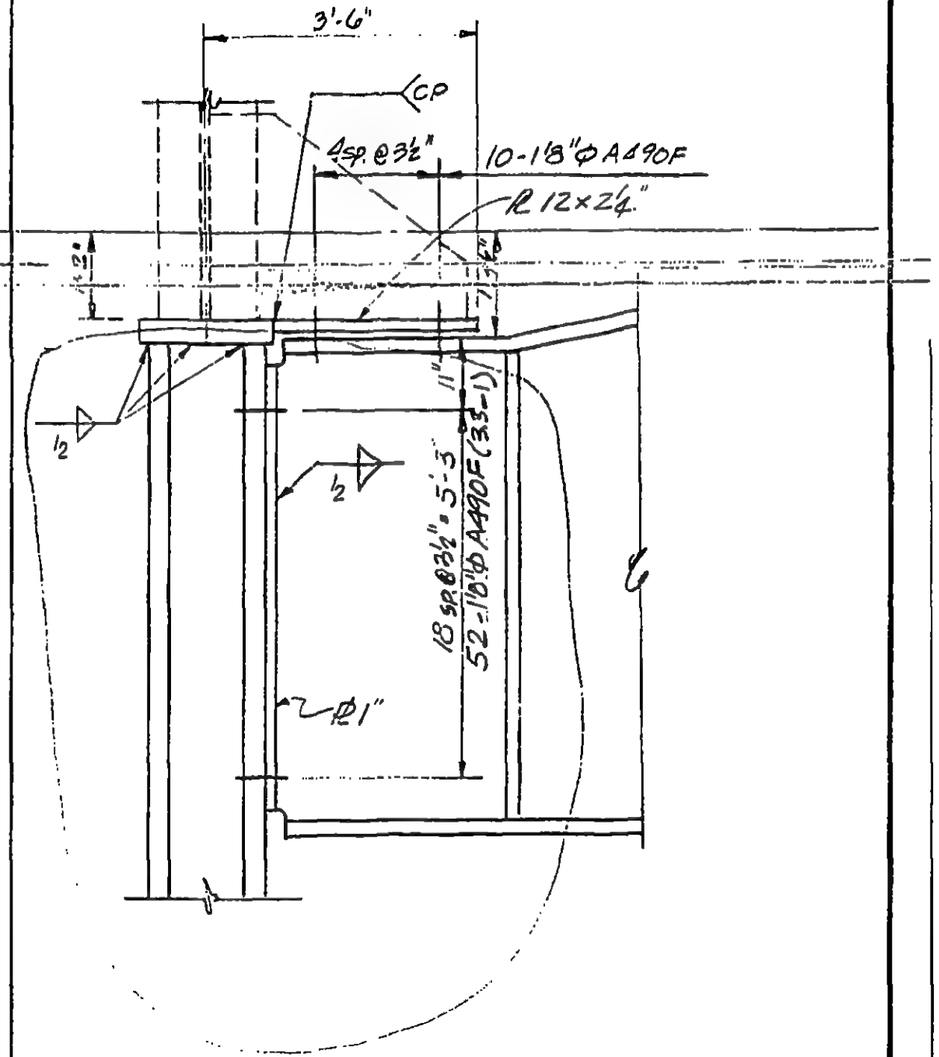

LICENSED PROFESSIONAL ENGINEER
LESLIE E. ROBERTSON
NO 34360
UNIVERSITY OF THE STATE OF NEW YORK

DESIGNED

DRAWN

REVIEWED

A | a

13-1K2.5-6

SKILLING, HELLE, CHRISTIANSEN, ROBERTSON — Structural & Civil Engineers

PROJECT: THE WORLD TRADE CENTER | TITLE: GIRDER FUTURE COLUMN DETAILS | DATE: 11-3-72

REVISIONS

Released for construction 11-20-72

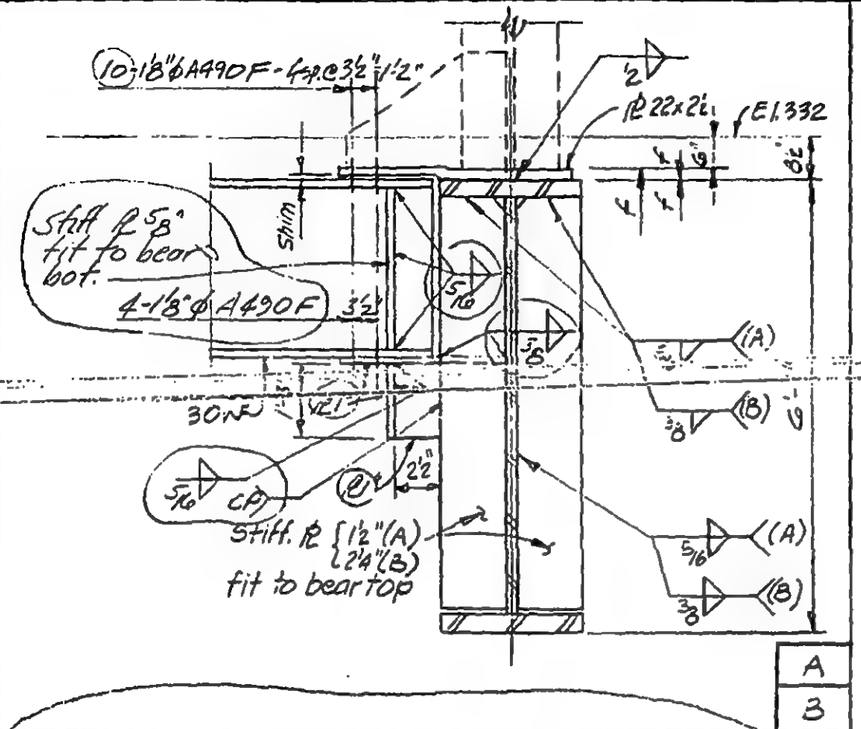

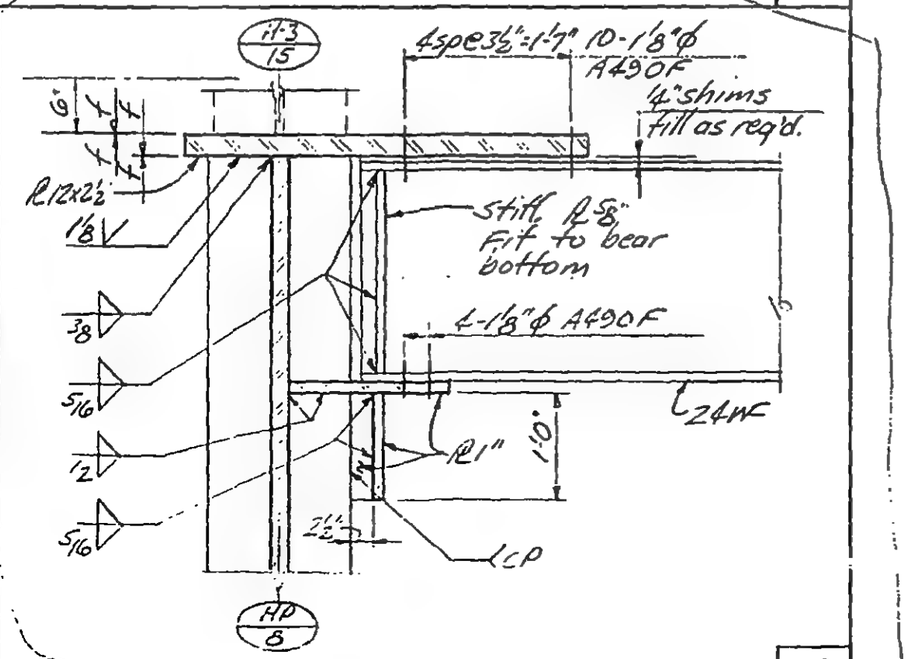

LICENSED PROFESSIONAL ENGINEER LESLIE E. ROBERTSON No 34360 UNIVERSITY OF THE STATE OF NEW YORK

DESIGNED

DRAWN

REVIEWED

12-K7 E-7

SKILLING, HELLE, CHRISTIANSEN, ROBERTSON — Structural & Civil Engineers

PROJECT: THE WORLD TRADE CENTER | TITLE: GIRDER ELEVATIONS | DATE: 11-3-72

REVISIONS

Release for construction 11-20-72

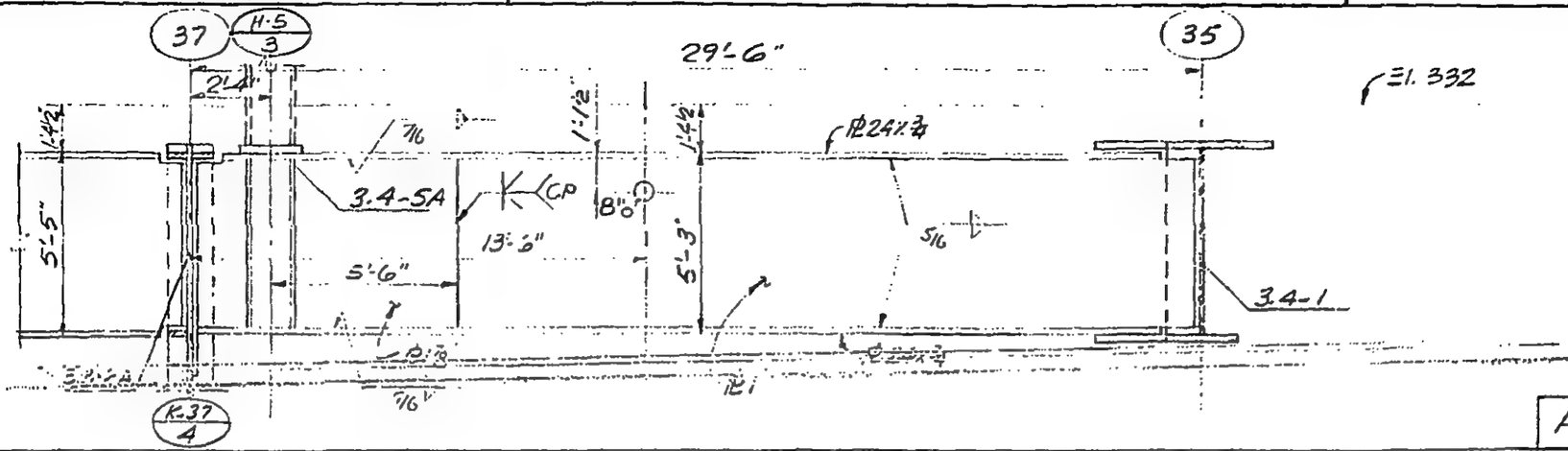

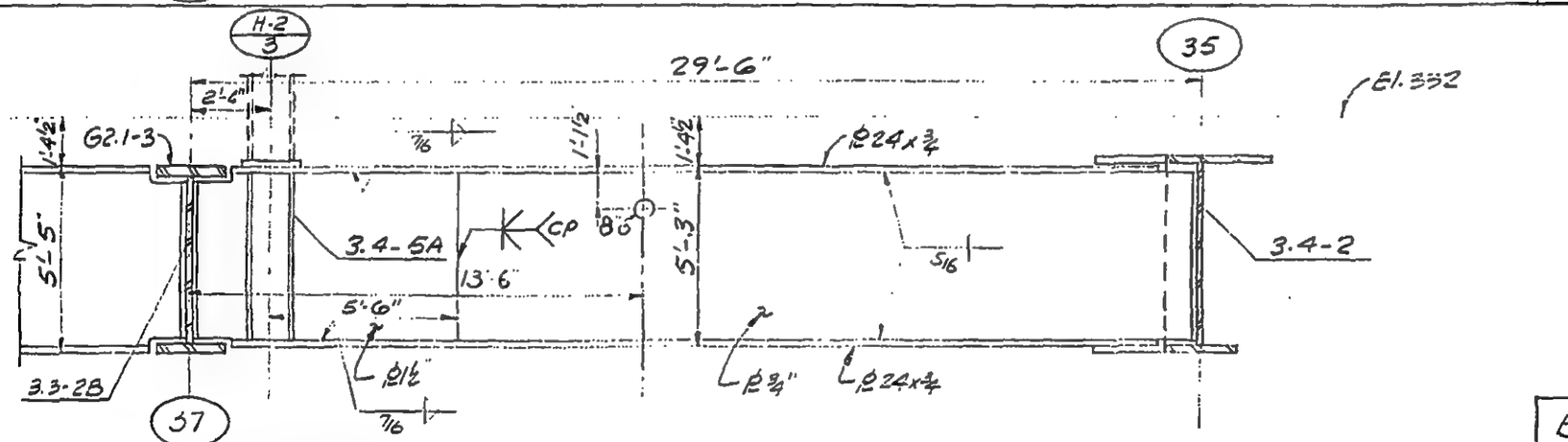

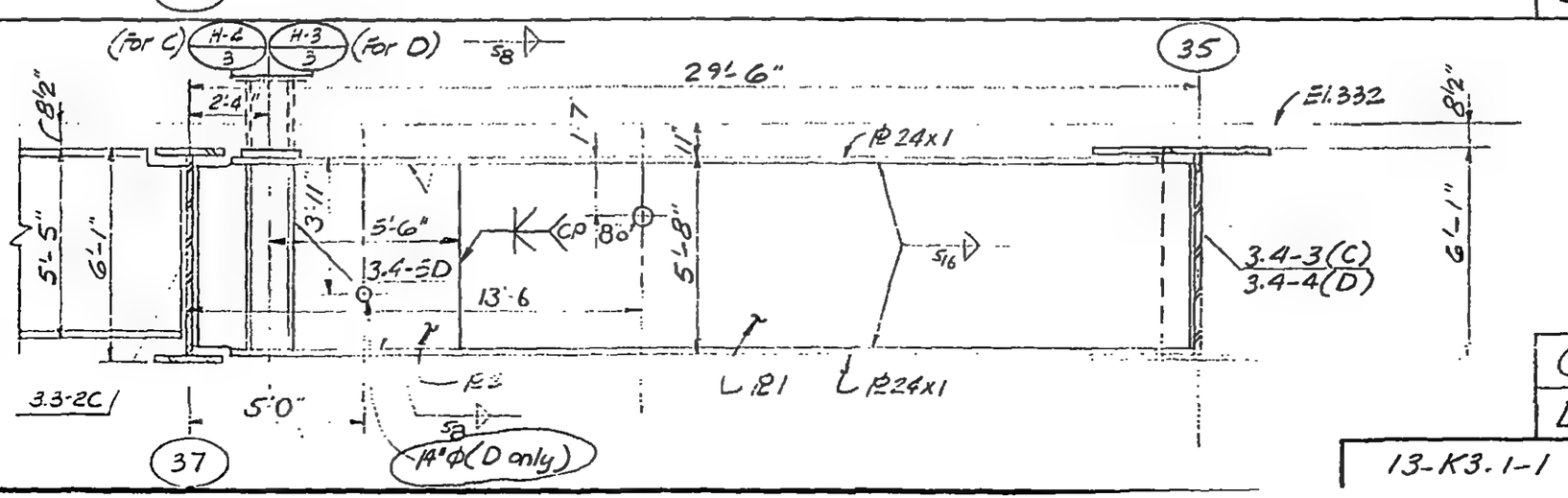

13-K3.1-1

LICENSED PROFESSIONAL ENGINEER — LESLIE E. ROBERTSON — NO 34360 — UNIVERSITY OF THE STATE OF NEW YORK

DESIGNED

DRAWN: A.L. Franqui

REVIEWED

SKILLING, HELLE, CHRISTIANSEN, ROBERTSON — Structural & Civil Engineers

PROJECT: THE WORLD TRADE CENTER | TITLE: GIRDER ELEVATIONS | DATE: 11-3-72

REVISIONS

Released for construction 11-20-72

12-11-72

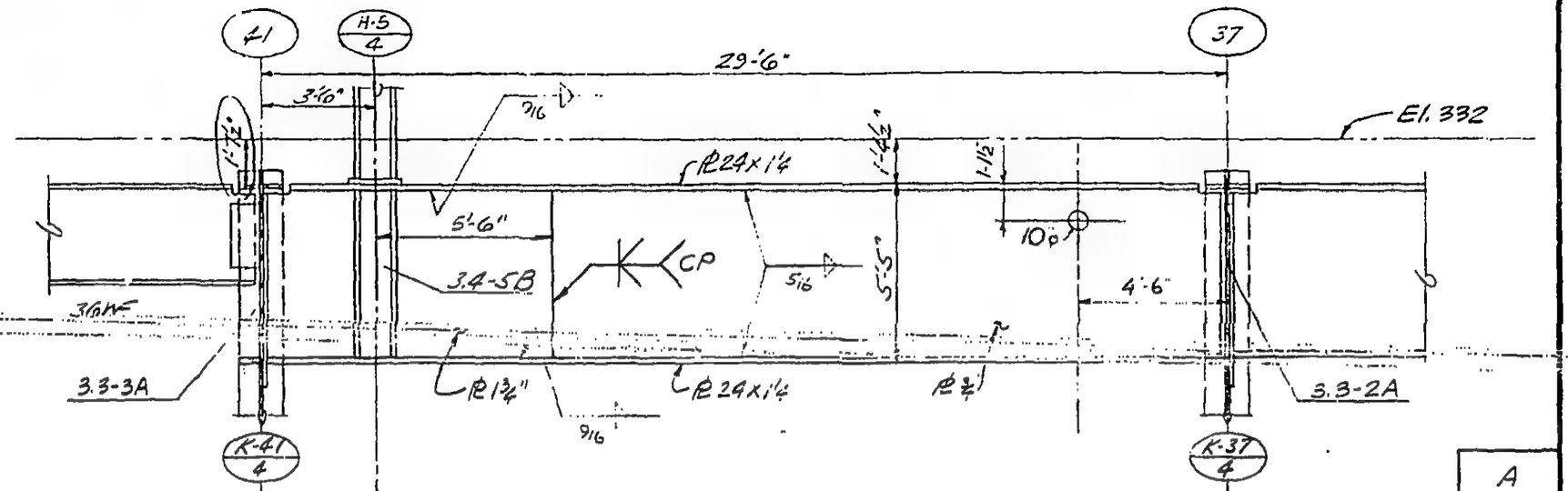

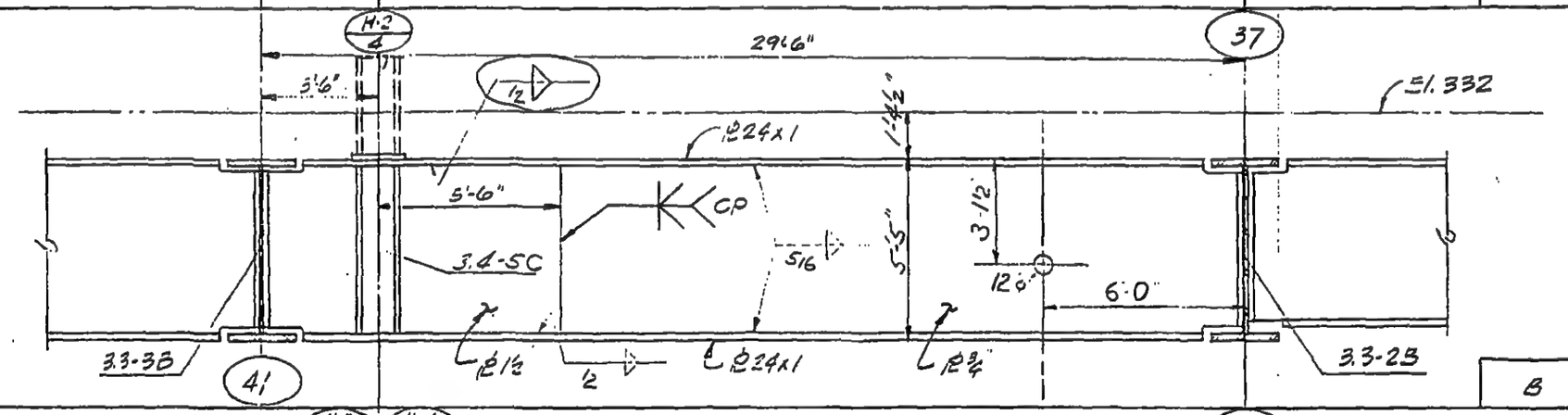

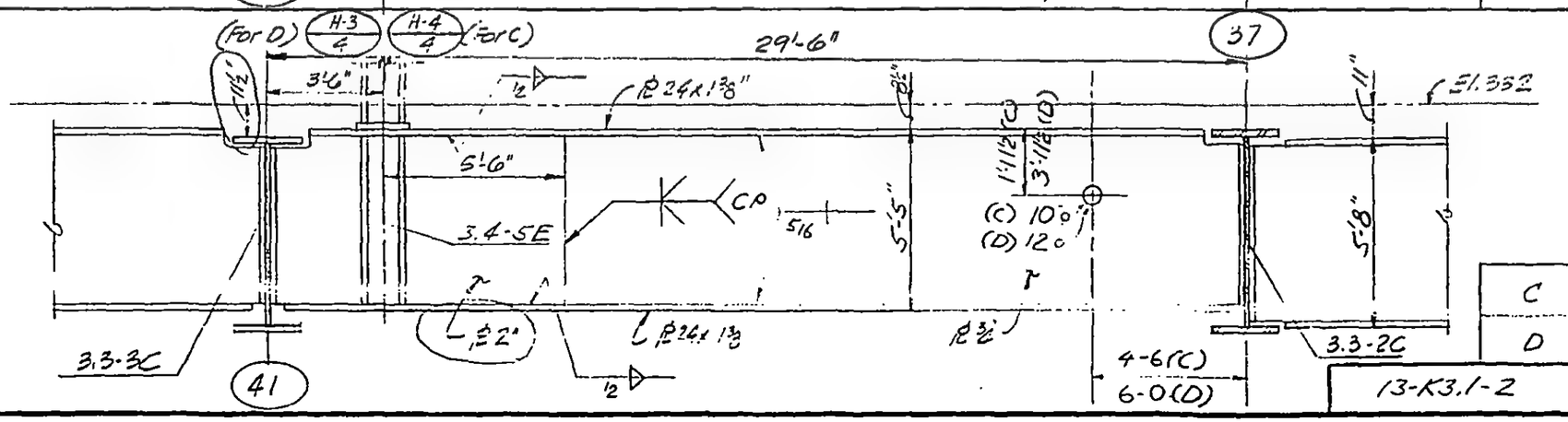

LICENSED PROFESSIONAL ENGINEER — LESLIE E. ROBERTSON — NO 34360 — UNIVERSITY OF THE STATE OF NEW YORK

DESIGNED

DRAWN

REVIEWED

SKILLING, HELLE, CHRISTIANSEN, ROBERTSON — Structural & Civil Engineers

PROJECT THE WORLD TRADE CENTER | TITLE GIRDER ELEVATIONS | DATE 11-3-72

REVISIONS

Release for construction 11-20-72

12-11-72

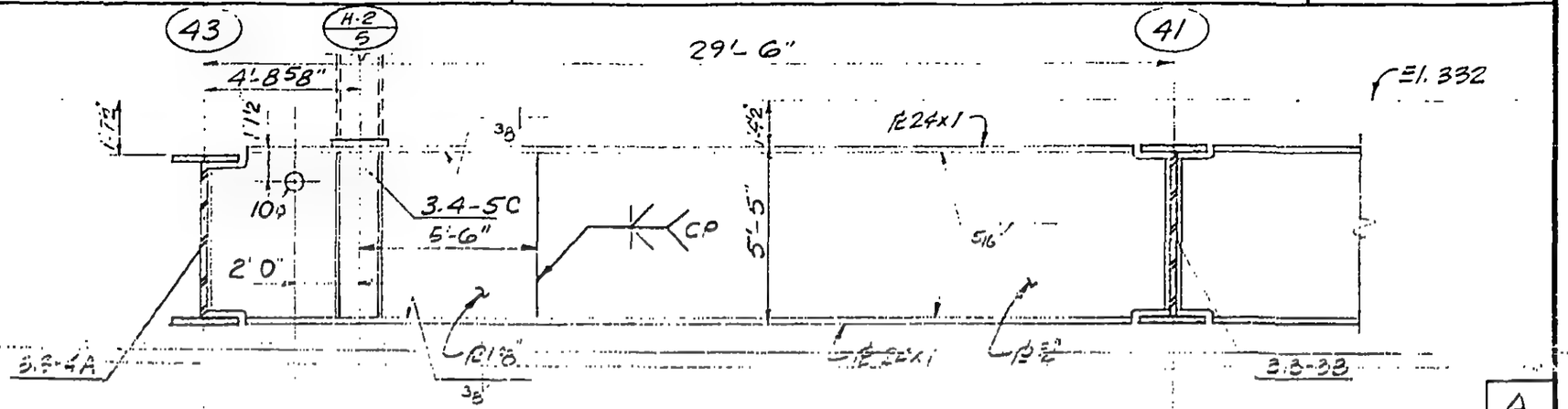

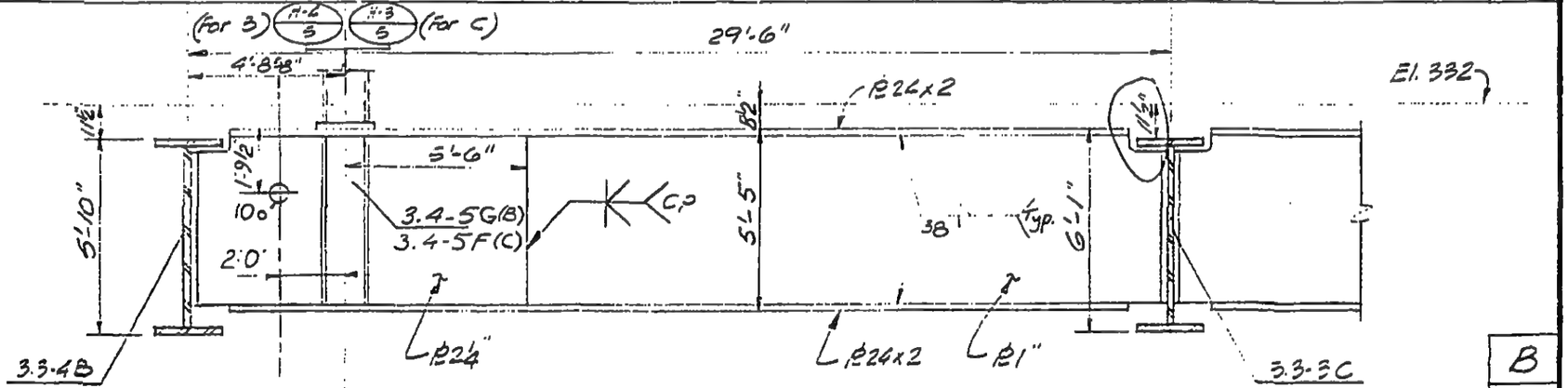

LICENSED PROFESSIONAL ENGINEER — LESLIE E. ROBERTSON — No 34360 — UNIVERSITY OF THE STATE OF NEW YORK

DESIGNED

DRAWN A.L. Franqui

REVIEWED

13-K3.1-3

SKILLING, HELLE, CHRISTIANSEN, ROBERTSON — Structural & Civil Engineers

PROJECT: THE WORLD TRADE CENTER | TITLE: GIRDER ELEVATIONS | DATE: 11-3-72

REVISIONS

Released for construction 11-20-72

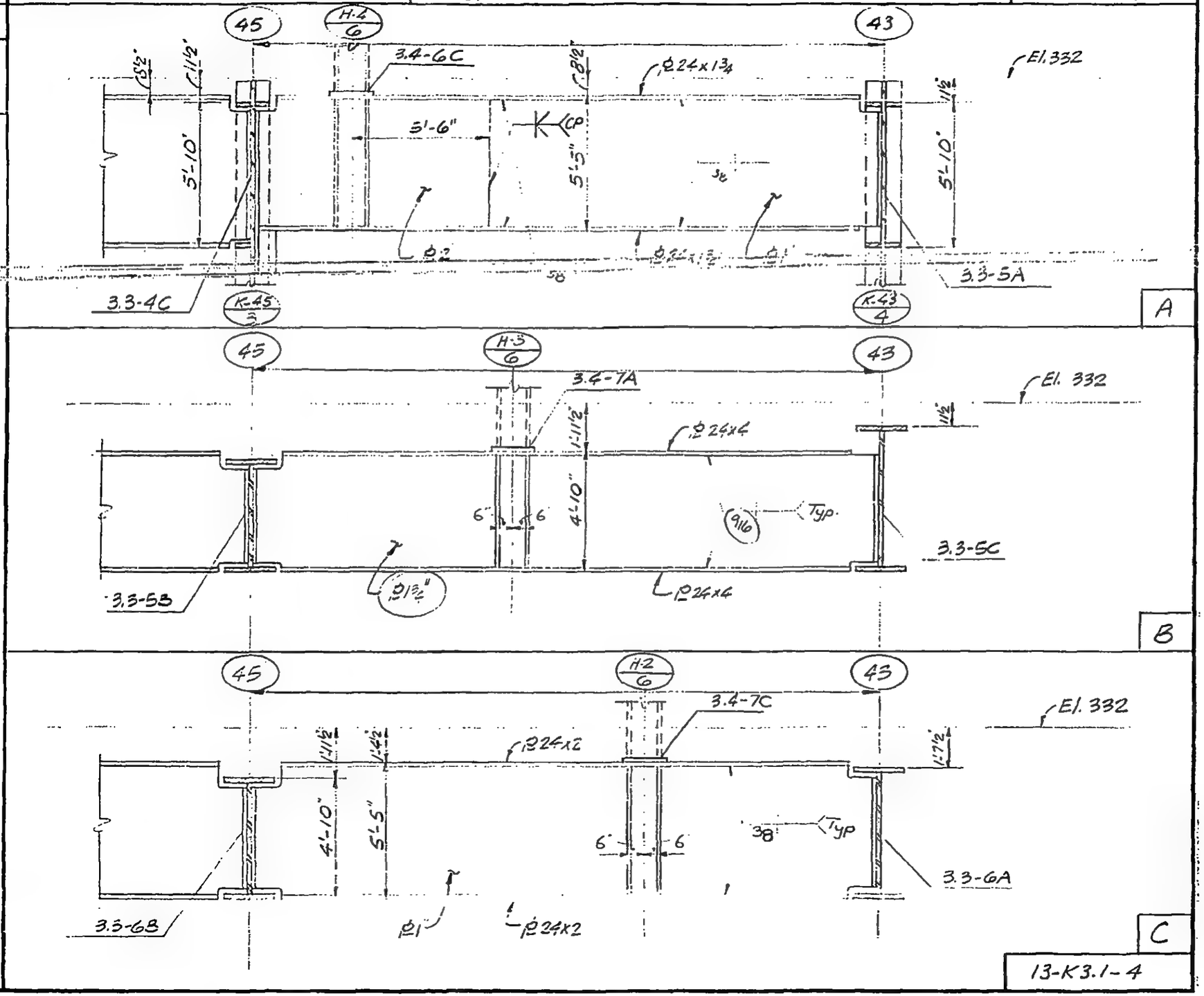

LICENSED PROFESSIONAL ENGINEER — LESLIE E. ROBERTSON — No. 34360 — UNIVERSITY OF THE STATE OF NEW YORK

DESIGNED

DRAWN: A.I. Fronqui

REVIEWED

13-K3.1-4

SKILLING, HELLE, CHRISTIANSEN, ROBERTSON — Structural & Civil Engineers

PROJECT: THE WORLD TRADE CENTER | TITLE: GIRDER ELEVATIONS | DATE: 11-3-72

REVISIONS

Released for construction 11-20-72

12-11-72

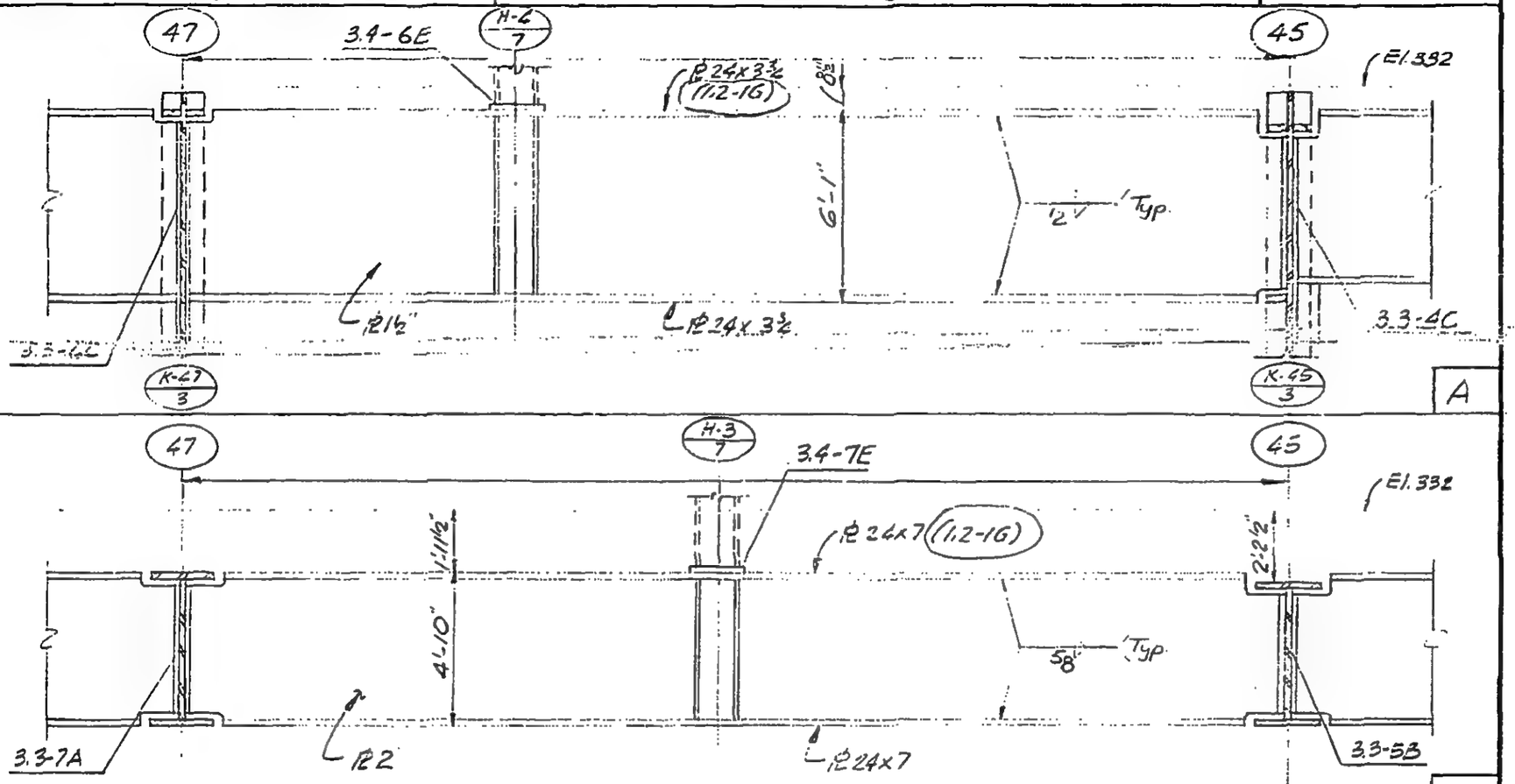

LICENSED PROFESSIONAL ENGINEER — LESLIE E. ROBERTSON — NO 34360 — UNIVERSITY OF THE STATE OF NEW YORK

DESIGNED

DRAWN: A.L. Fronçui

REVIEWED

13-K3.1-5

SKILLING, HELLE, CHRISTIANSEN, ROBERTSON — Structural & Civil Engineers

PROJECT: THE WORLD TRADE CENTER | TITLE: GIRDER ELEVATIONS | DATE: 11-3-72

REVISIONS

Released for construction 11-20-72

6-4-73

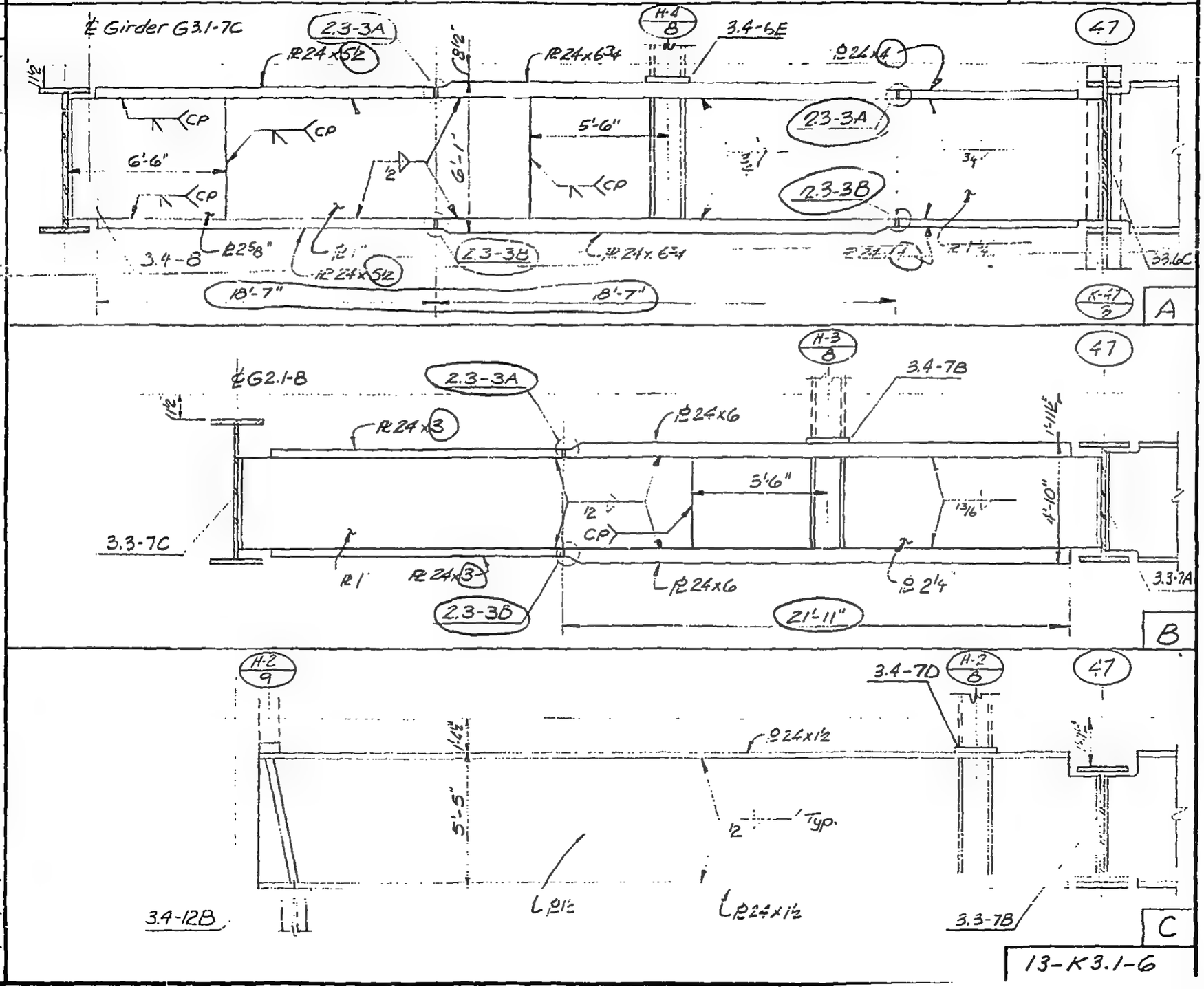

13-K3.1-6

LICENSED PROFESSIONAL ENGINEER — LESLIE E. ROBERTSON — No. 34360 — UNIVERSITY OF THE STATE OF NEW YORK

DESIGNED

DRAWN A.L. Franqui

REVIEWED

SKILLING, HELLE, CHRISTIANSEN, ROBERTSON — Structural & Civil Engineers

PROJECT: THE WORLD TRADE CENTER | TITLE: GIRDER ELEVATIONS | DATE: 11-3-72

REVISIONS

Released for construction 11-20-72

6-4-73

6-20-73

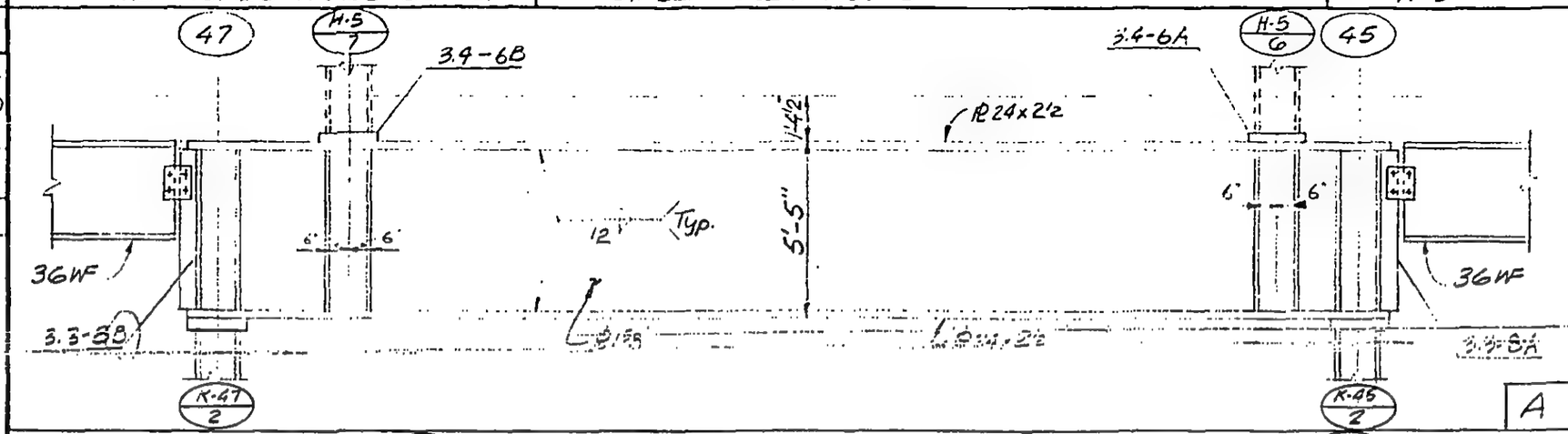

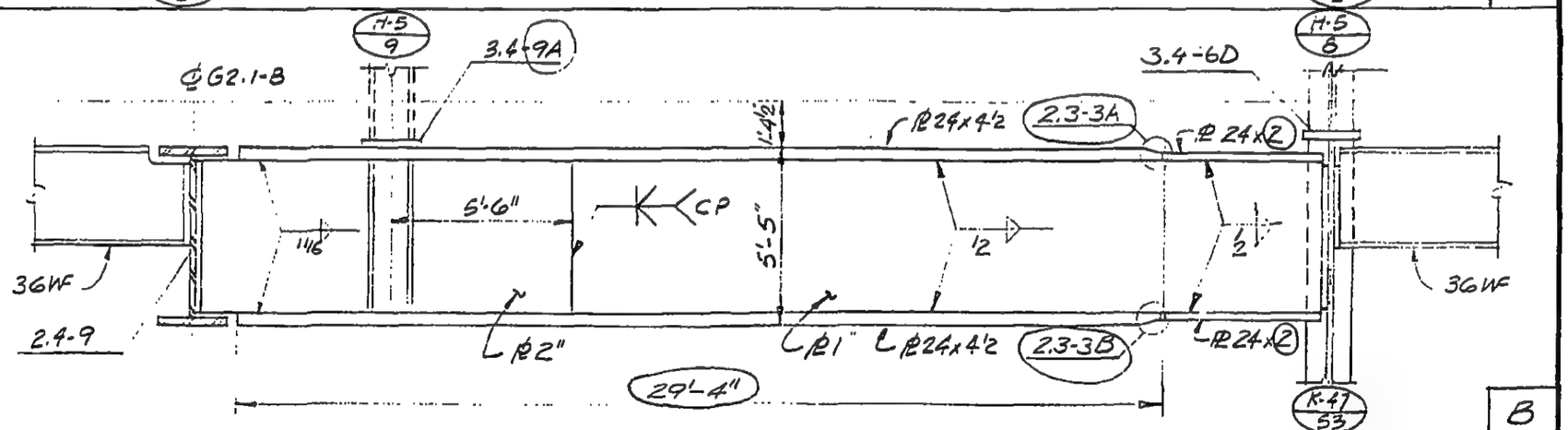

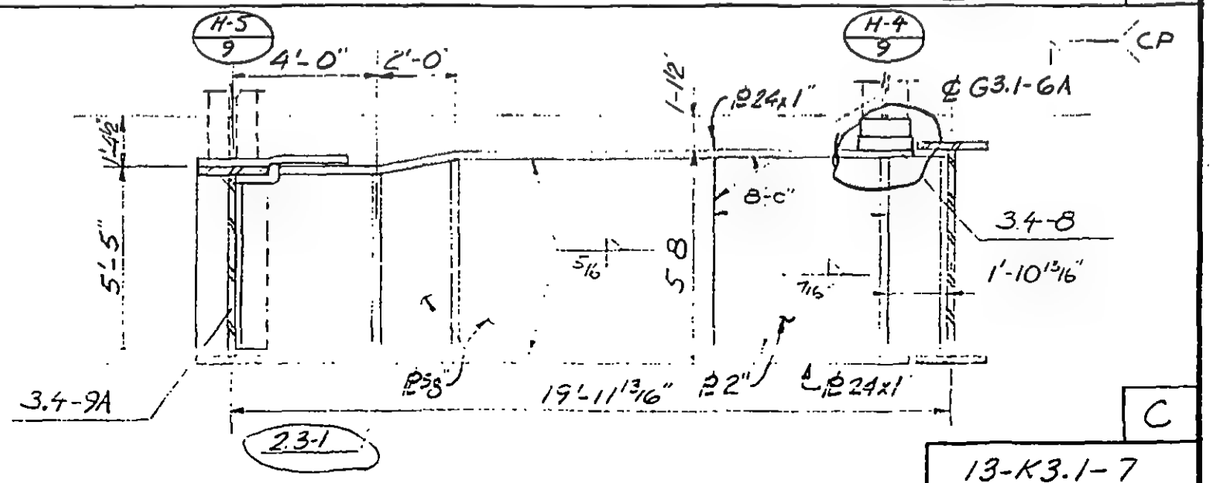

13-K3.1-7

LICENSED PROFESSIONAL ENGINEER — LESLIE E. ROBERTSON — No 34360 — UNIVERSITY OF THE STATE OF NEW YORK

DESIGNED

DRAWN A.L. Franqui

REVIEWED

SKILLING, HELLE, CHRISTIANSEN, ROBERTSON — Structural & Civil Engineers

PROJECT: THE WORLD TRADE CENTER | TITLE: GIRDER ELEVATIONS | DATE: 11-3-72

REVISIONS

Released for construction 11-20-72

12-11-72

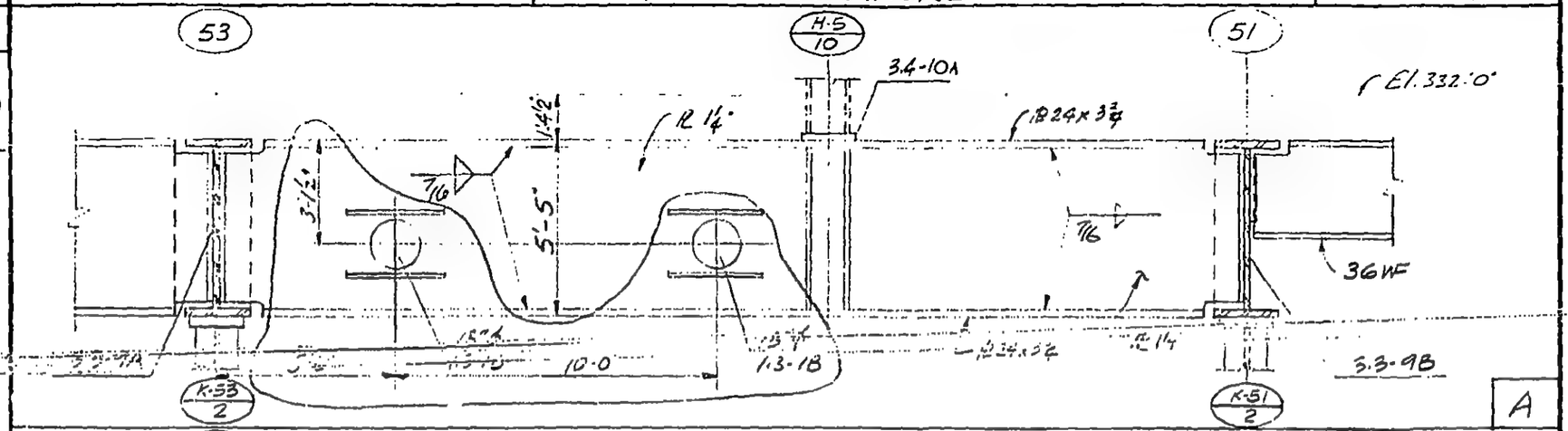

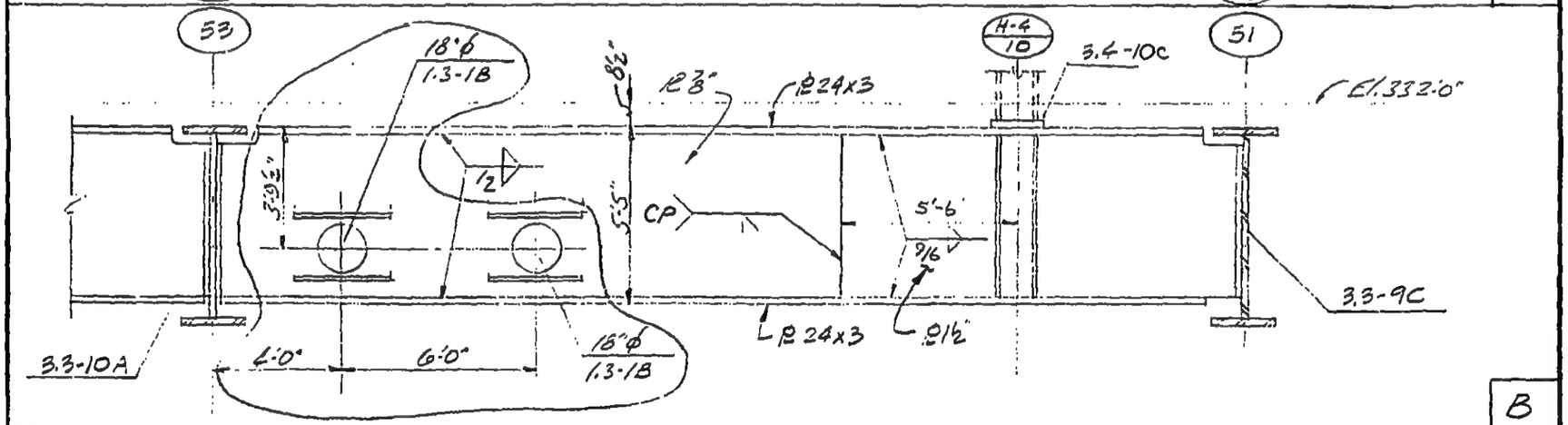

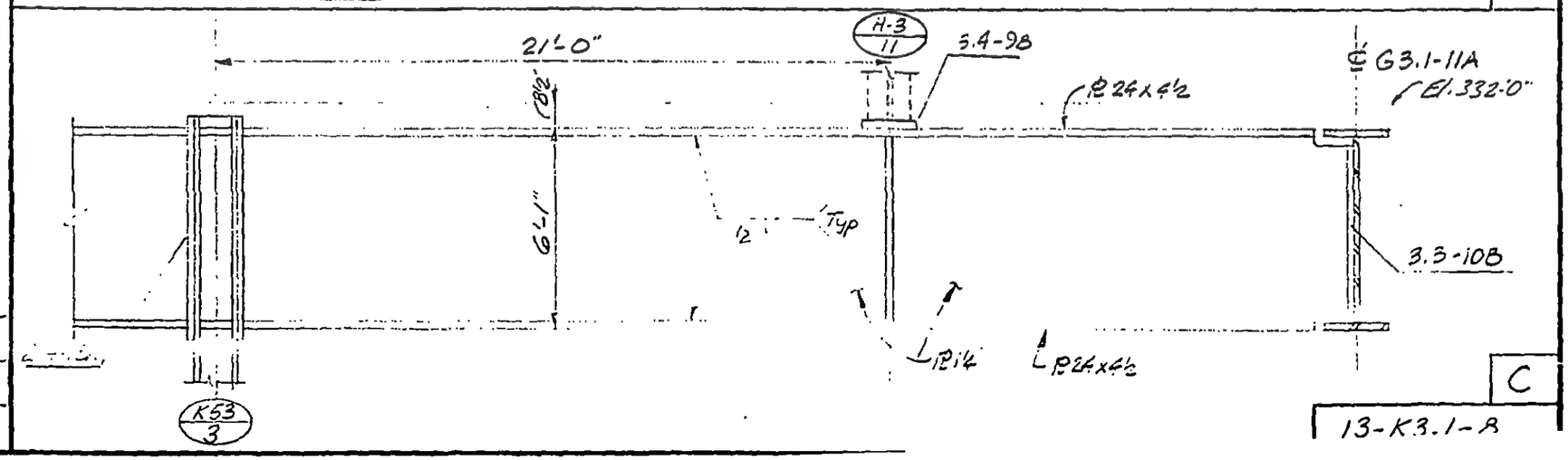

LICENSED PROFESSIONAL ENGINEER
LESLIE E. ROBERTSON
NO 34360
UNIVERSITY OF THE STATE OF NEW YORK

DESIGNED

DRAWN
A.L. Franqui

REVIEWED

13-K3.1-A

SKILLING, HELLE, CHRISTIANSEN, ROBERTSON — Structural & Civil Engineers

PROJECT: THE WORLD TRADE CENTER | TITLE: GIRDER ELEVATIONS | DATE: 11-3-72

REVISIONS

Released for Construction 11-20-72

12-11-72

6-4-73

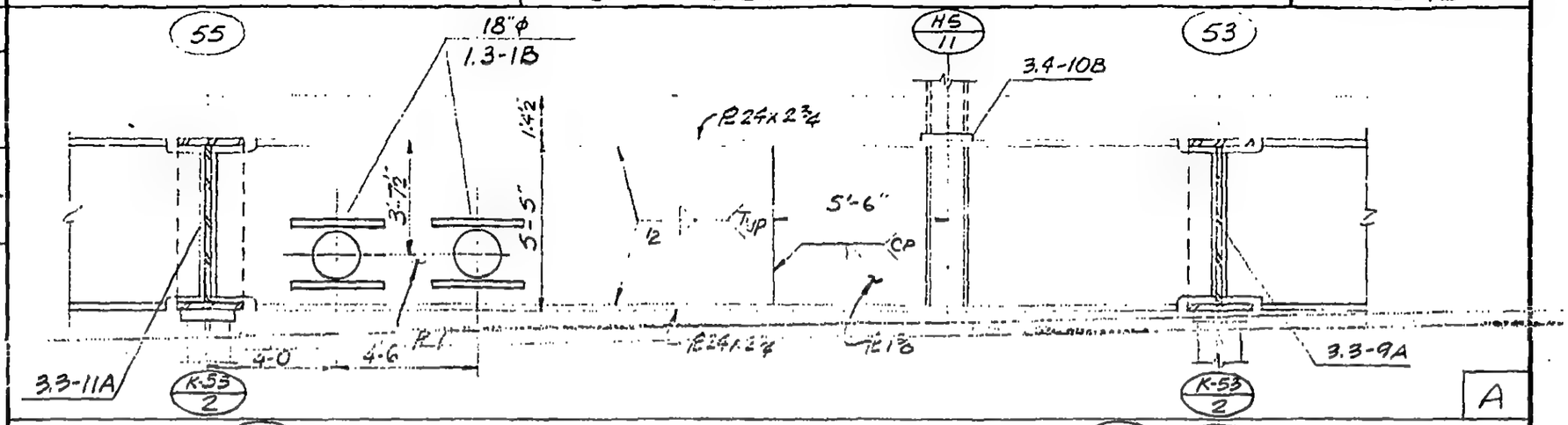

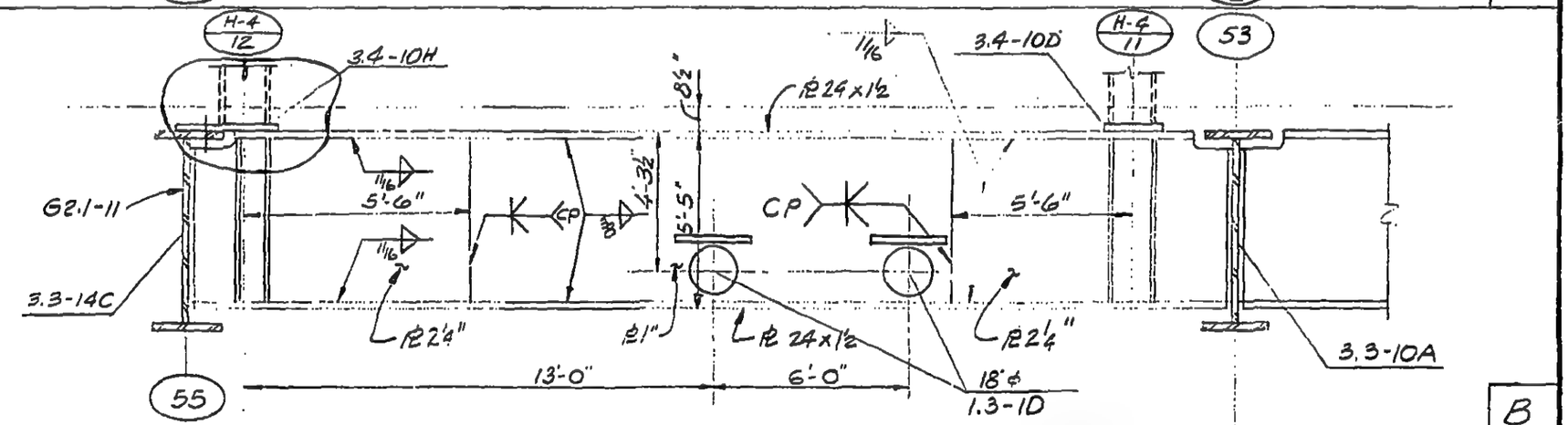

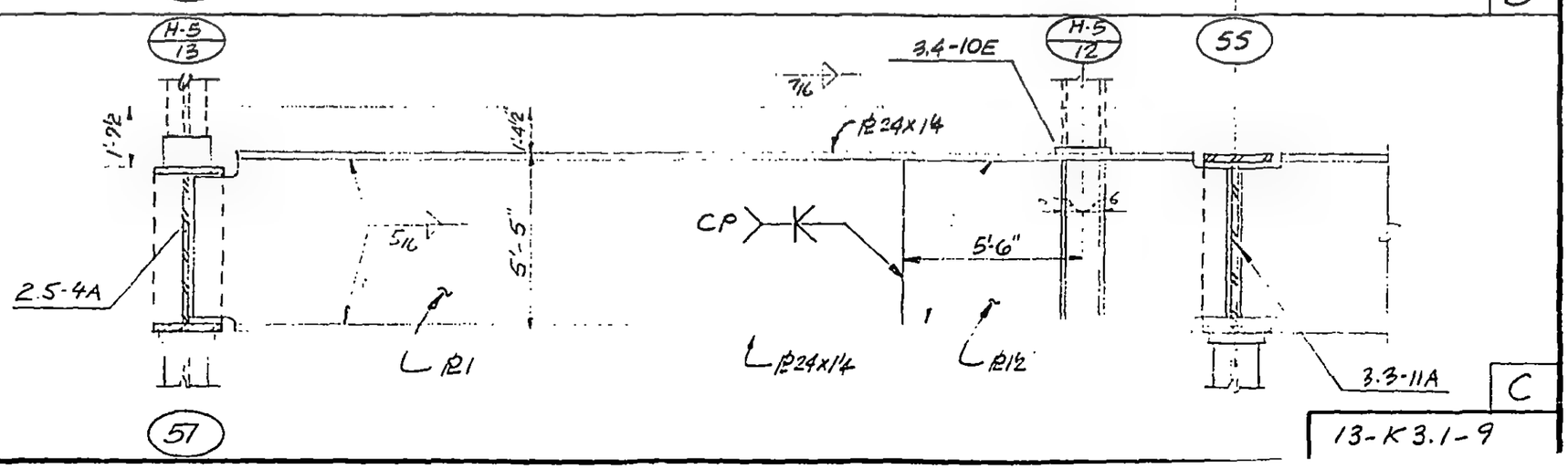

LICENSED PROFESSIONAL ENGINEER — LESLIE E. ROBERTSON — No. 34360 — UNIVERSITY OF THE STATE OF NEW YORK

DESIGNED

DRAWN A.L. Fronçui

REVIEWED

13-K 3.1-9

SKILLING, HELLE, CHRISTIANSEN, ROBERTSON — Structural & Civil Engineers

PROJECT: THE WORLD TRADE CENTER | TITLE: GIRDER ELEVATIONS | DATE: 11-3-72

REVISIONS

Released for construction 11-20-72

4-20-73

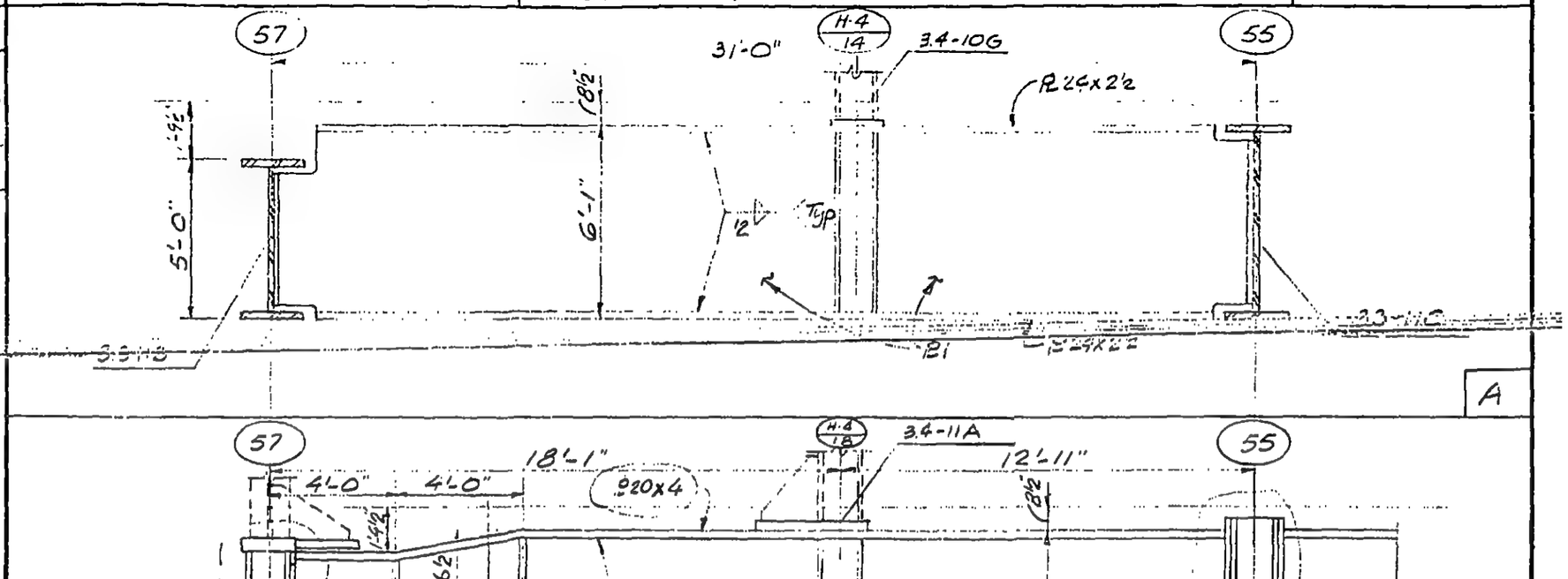

LICENSED PROFESSIONAL ENGINEER — LESLIE E. ROBERTSON — No 34360 — UNIVERSITY OF THE STATE OF NEW YORK

DESIGNED

DRAWN A.L. Franqui

REVIEWED

SKILLING, HELLE, CHRISTIANSEN, ROBERTSON — Structural & Civil Engineers

PROJECT: THE WORLD TRADE CENTER | TITLE: GIRDER ELEVATIONS | DATE: 11-3-72

REVISIONS

Released for construction 11-20-72

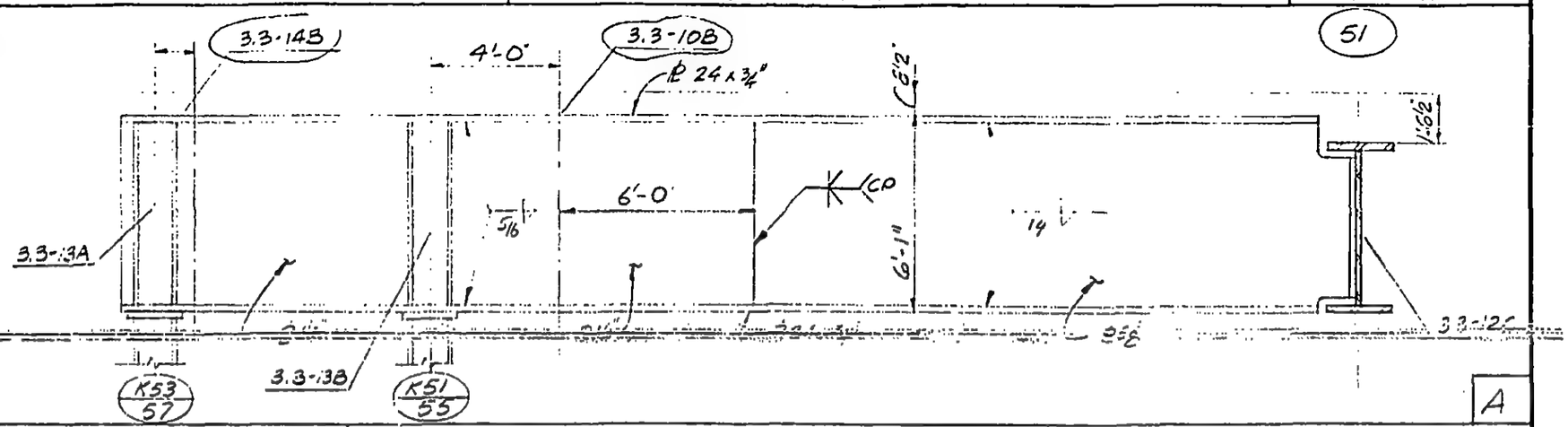

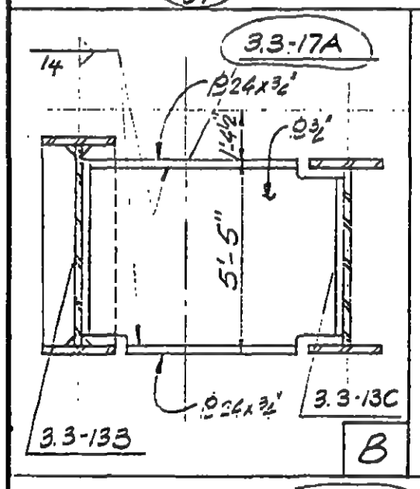

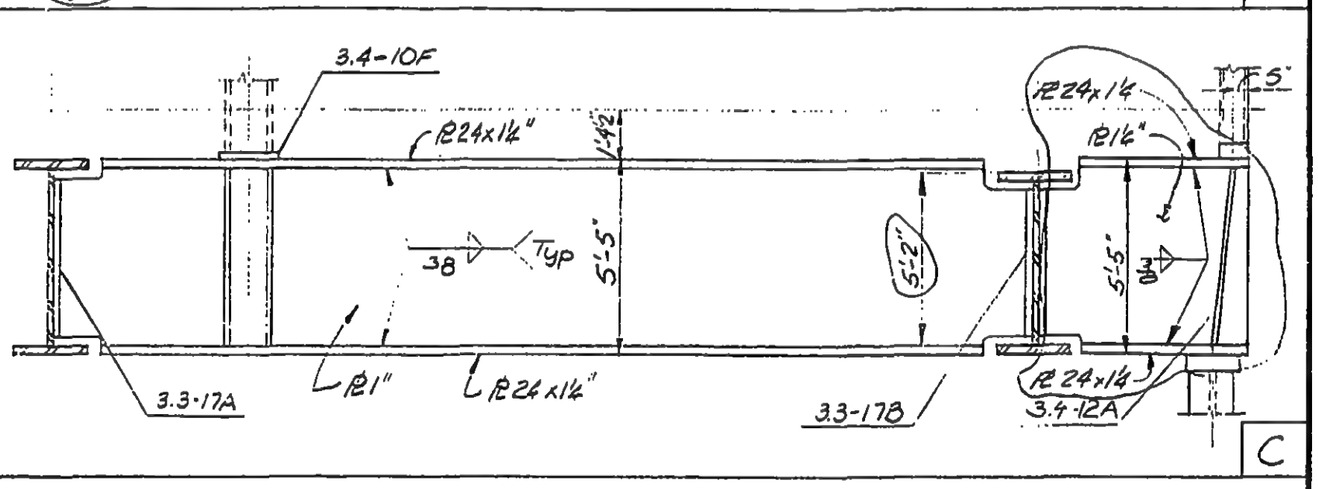

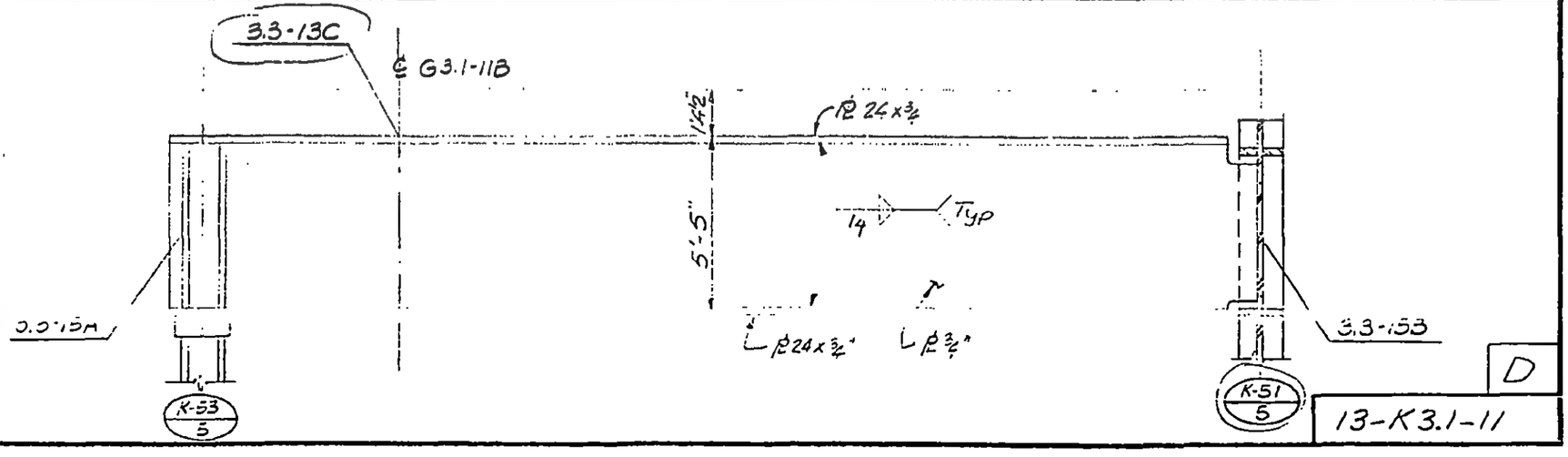

13-K3.1-11

LICENSED PROFESSIONAL ENGINEER — LESLIE E. ROBERTSON — No 34360 — UNIVERSITY OF THE STATE OF NEW YORK

DESIGNED

DRAWN A.L. Fronqui'

REVIEWED

SKILLING, HELLE, CHRISTIANSEN, ROBERTSON — Structural & Civil Engineers

PROJECT: THE WORLD TRADE CENTER | TITLE: GIRDER ELEVATIONS | DATE: 11-3-72

REVISIONS

Released for Construction 11-20-72

12-11-72

2-5-73

4-20-73

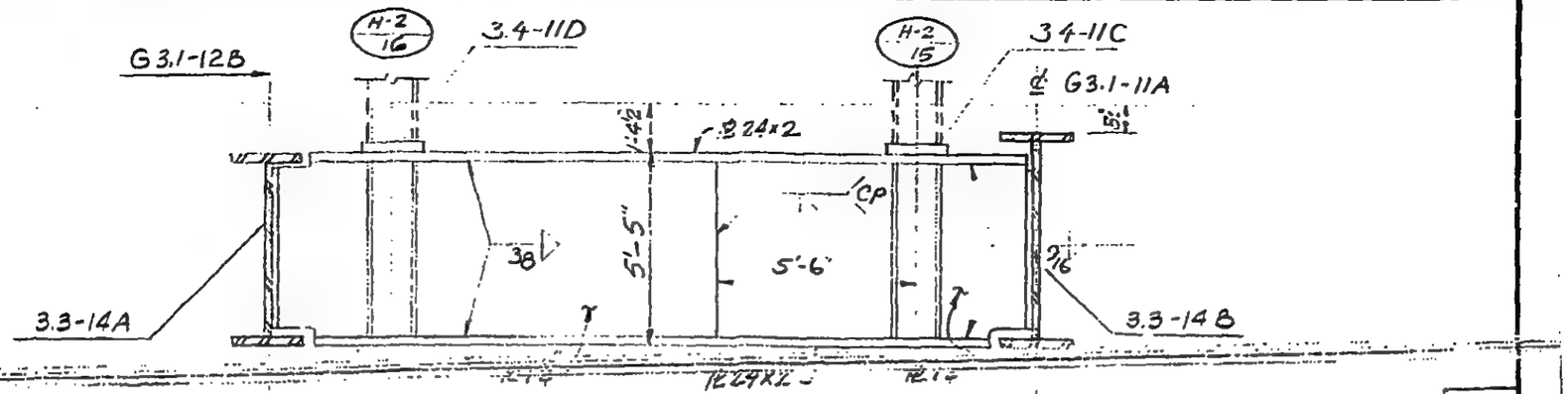

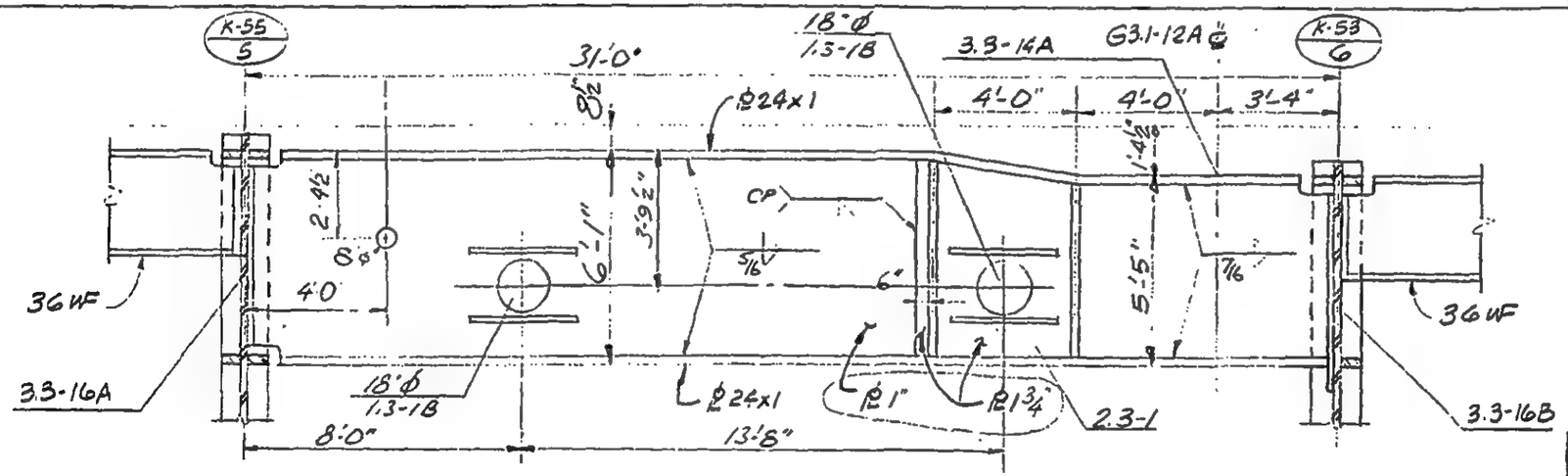

LICENSED PROFESSIONAL ENGINEER — LESLIE E. ROBERTSON — No 34360 — UNIVERSITY OF THE STATE OF NEW YORK

DESIGNED

DRAWN A.L. Frangui

REVIEWED

13-K3.1-12

SKILLING, HELLE, CHRISTIANSEN, ROBERTSON — Structural & Civil Engineers

PROJECT THE WORLD TRADE CENTER | TITLE TYPICAL GIRDER DETAILS | DATE 11-3-72

REVISIONS

Released for construction 11-20-72

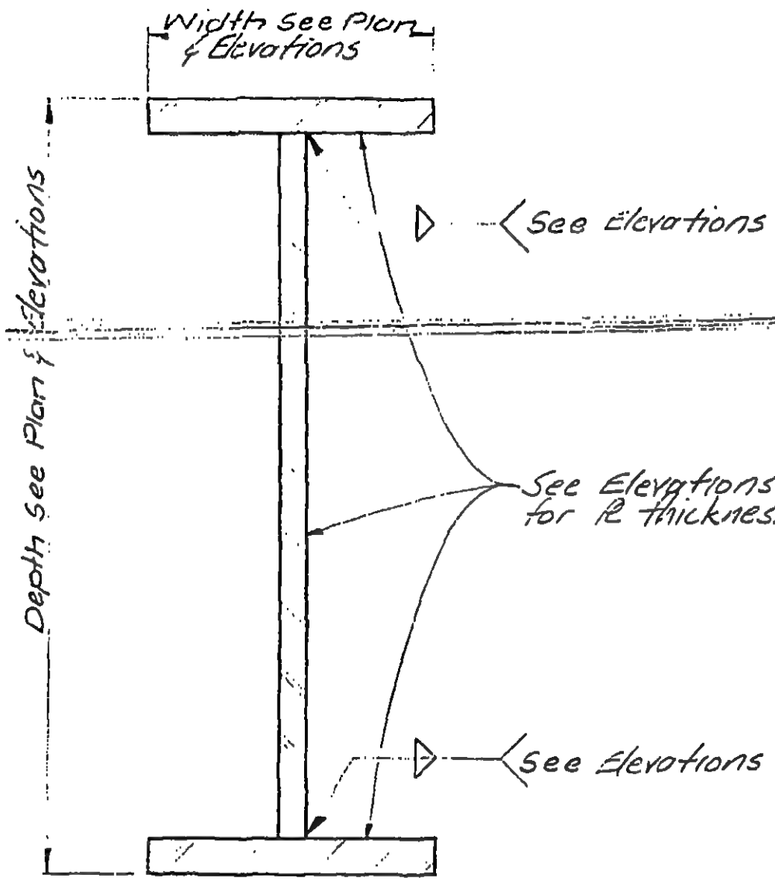

LICENSED PROFESSIONAL ENGINEER
LESLIE E. ROBERTSON
No 34360
UNIVERSITY OF THE STATE OF NEW YORK

DESIGNED

DRAWN TR

REVIEWED

13-K3.2-1

SKILLING, HELLE, CHRISTIANSEN, ROBERTSON — Structural & Civil Engineers

PROJECT: THE WORLD TRADE CENTER | TITLE: GIRDER CONNECTION TYPICAL END PLATE | DATE: 11-3-72

REVISIONS

Released for construction 11-20-72

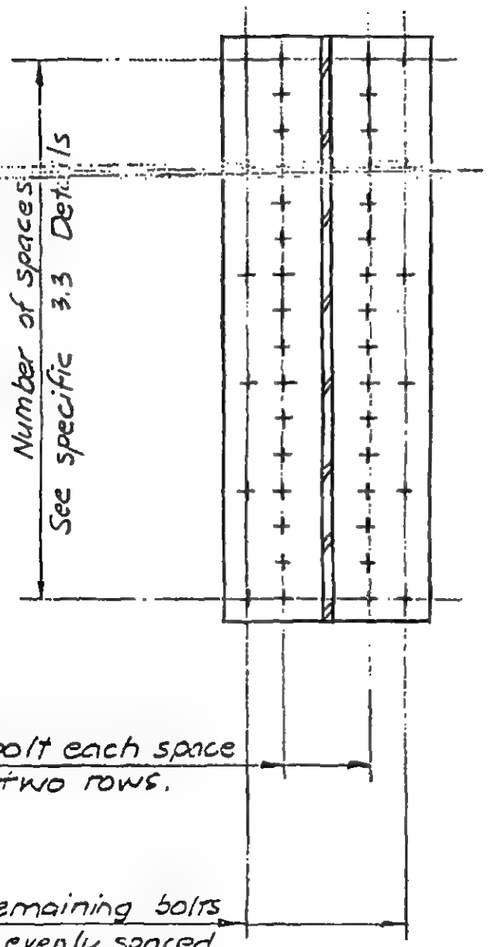

4 ROWS

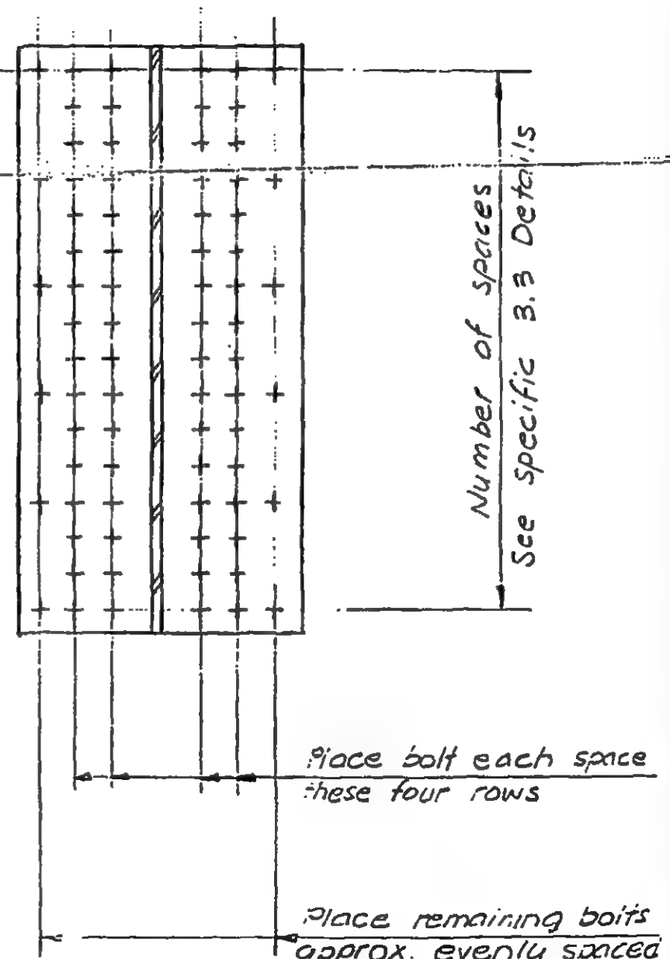

6 ROWS

LICENSED PROFESSIONAL ENGINEER LESLIE E. ROBERTSON NO 34360 UNIVERSITY OF THE STATE OF NEW YORK

DESIGNED

DRAWN

REVIEWED

See specific 3.3 Details for total number of bolts

See specific 3.3 Details for total number of bolts.

13-K3.3-1

SKILLING, HELLE, CHRISTIANSEN, ROBERTSON — Structural & Civil Engineers

PROJECT: THE WORLD TRADE CENTER | TITLE: GIRDER CONNECTION DETAILS | DATE: 11/3/72

REVISIONS

Released for construction 11-20-72

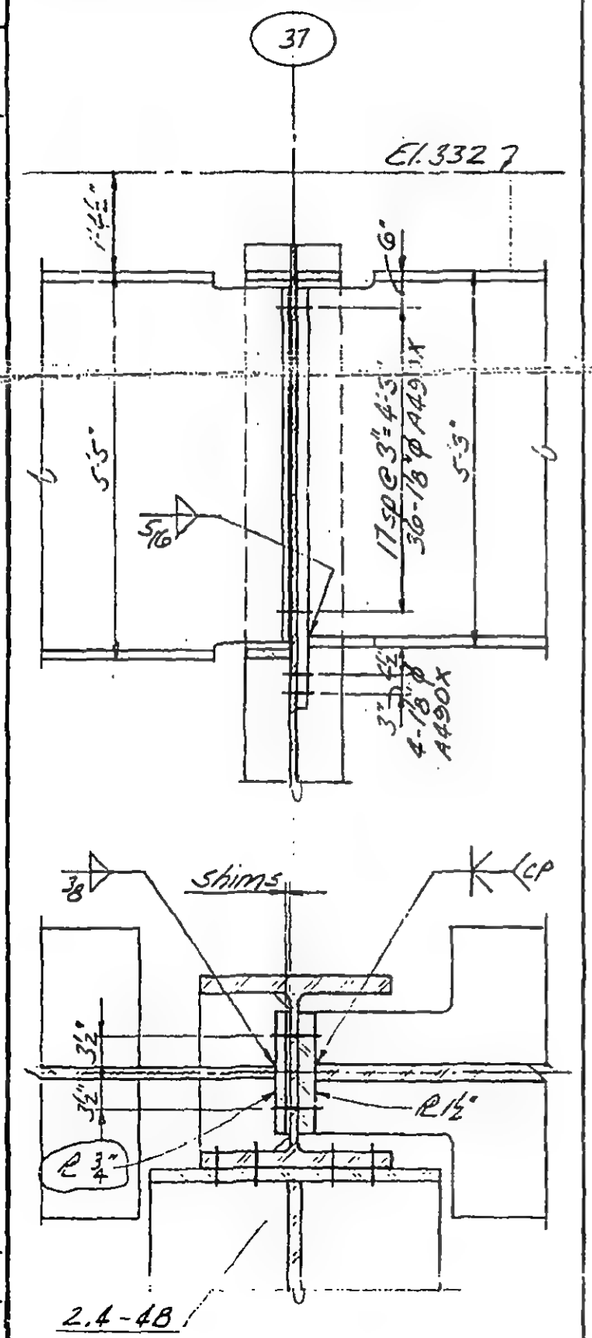

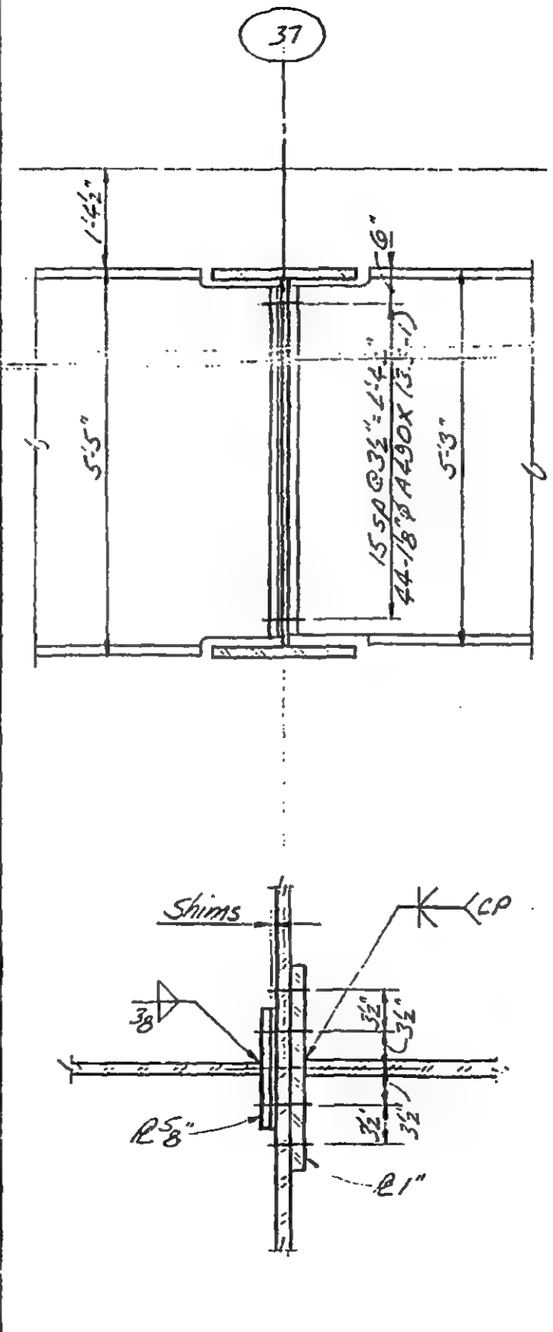

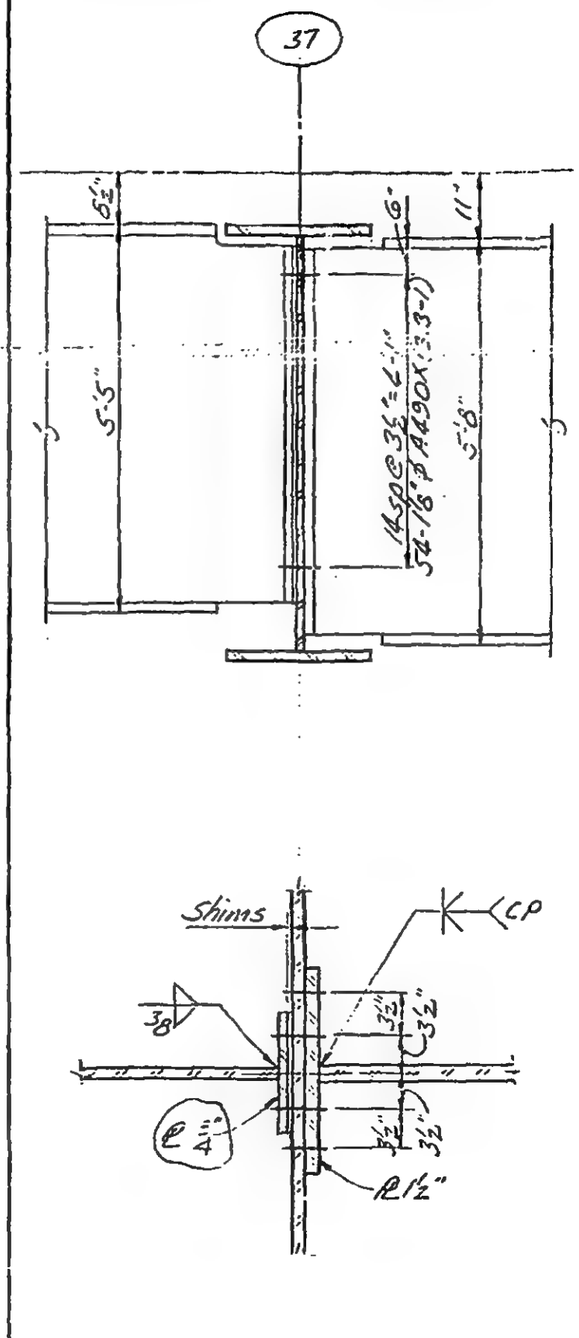

LICENSED PROFESSIONAL ENGINEER — LESLIE E. ROBERTSON — No 34360 — UNIVERSITY OF THE STATE OF NEW YORK

DESIGNED

DRAWN

REVIEWED

A | B | C

13-K3.3-Z

SKILLING, HELLE, CHRISTIANSEN, ROBERTSON — Structural & Civil Engineers

PROJECT: THE WORLD TRADE CENTER | TITLE: GIRDER CONNECTION DETAILS | DATE: 11-3-72

REVISIONS

Released for construction 11-20-72

12-11-72

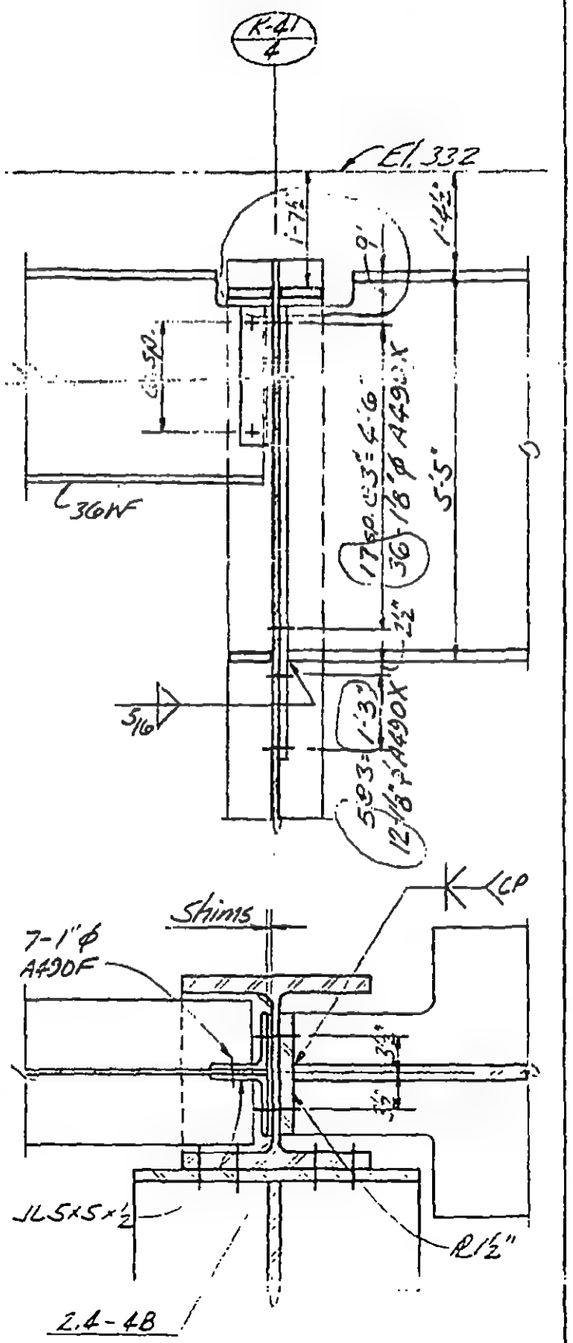

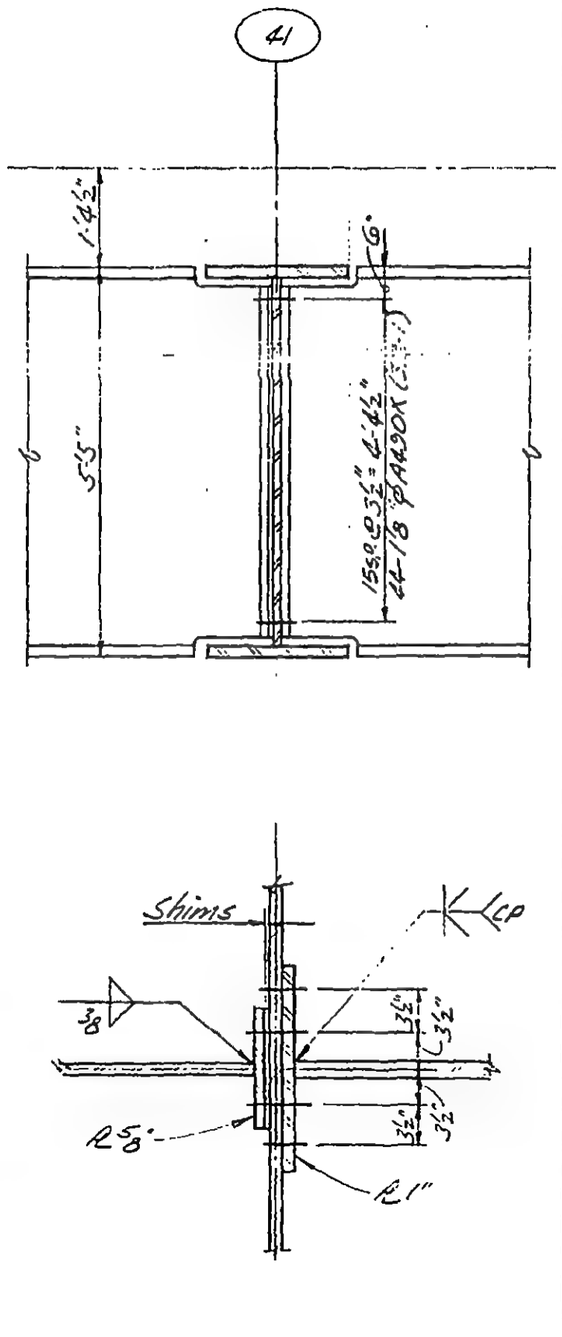

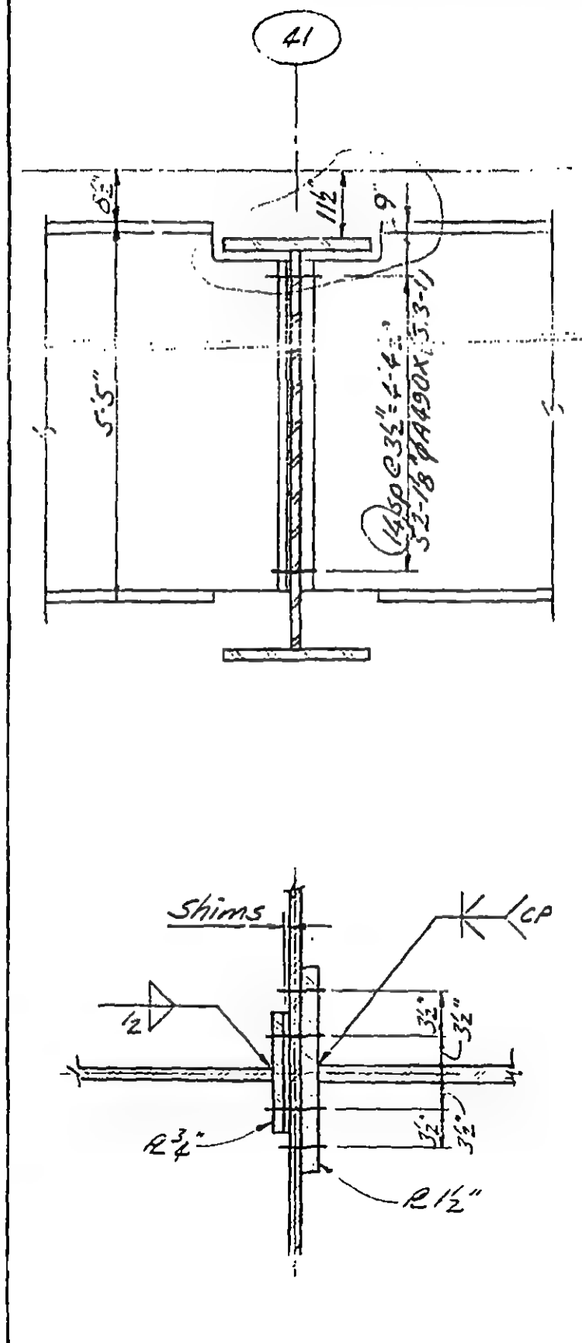

LICENSED PROFESSIONAL ENGINEER
LESLIE E. ROBERTSON
No 34360
UNIVERSITY OF THE STATE OF NEW YORK

DESIGNED

DRAWN

REVIEWED

A | B | C

13-K3.3-5

SKILLING, HELLE, CHRISTIANSEN, ROBERTSON — Structural & Civil Engineers

PROJECT: THE WORLD TRADE CENTER | TITLE: GIRDER CONNECTION DETAILS | DATE: 11-3-72

REVISIONS

Released for construction 11-20-72

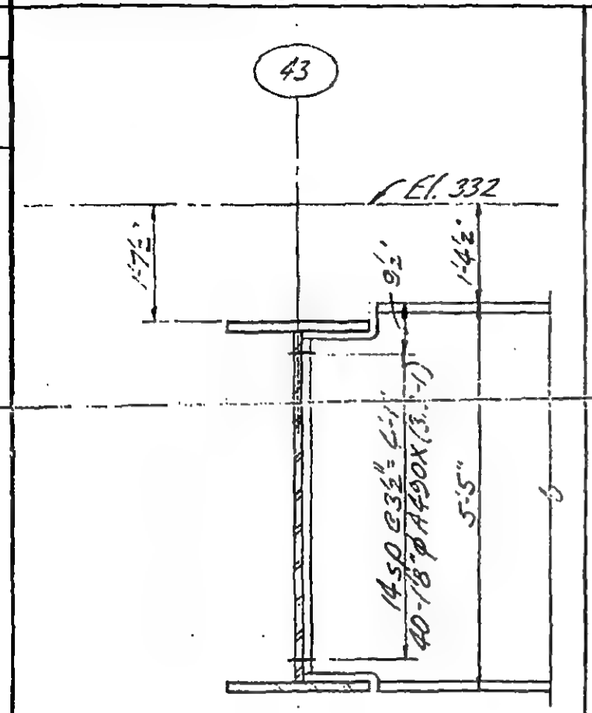

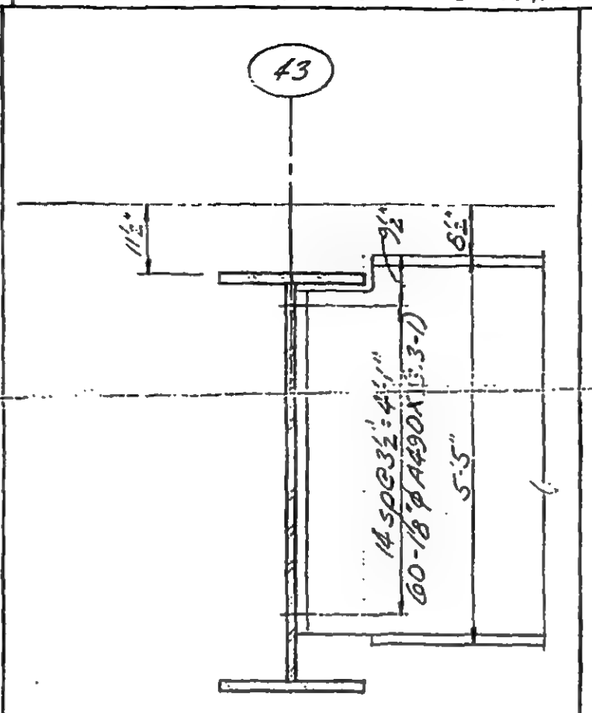

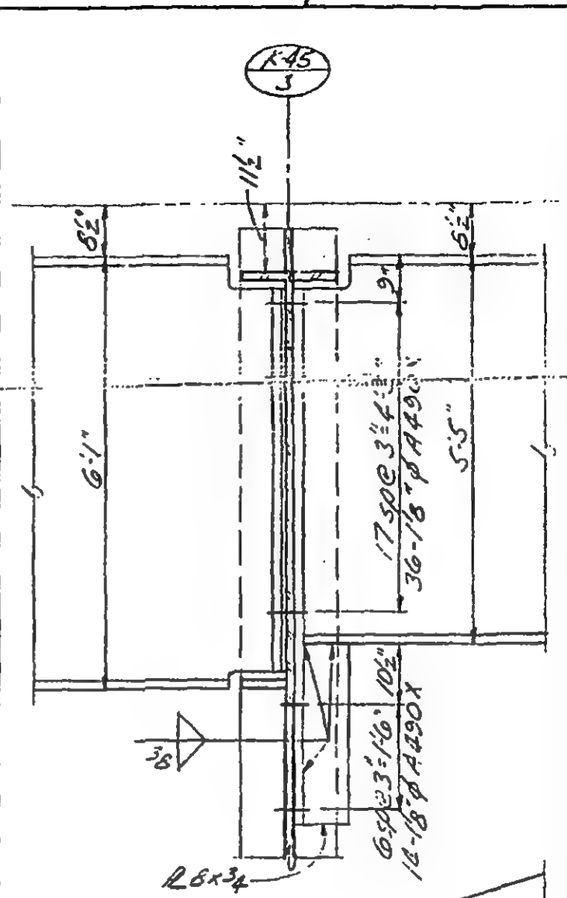

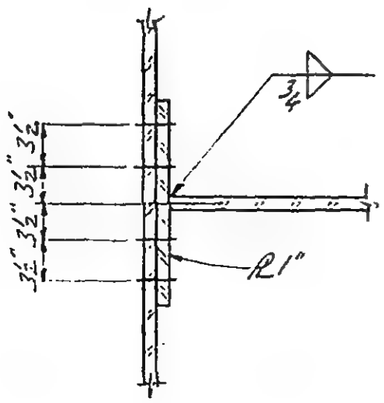

A

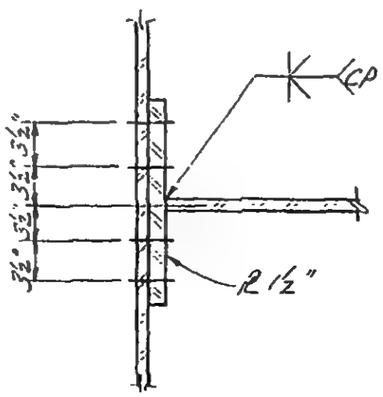

B

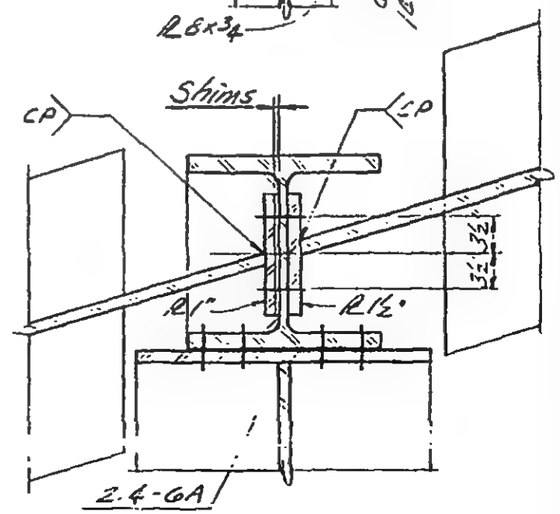

C

13-K3.3-4

LICENSED PROFESSIONAL ENGINEER
LESLIE E. ROBERTSON
No 34360
UNIVERSITY OF THE STATE OF NEW YORK

DESIGNED

DRAWN

REVIEWED

SKILLING, HELLE, CHRISTIANSEN, ROBERTSON — Structural & Civil Engineers

PROJECT: THE WORLD TRADE CENTER | TITLE: GIRDER CONNECTION DETAILS | DATE: 11-3-72

REVISIONS

Released for construction 11-20-72

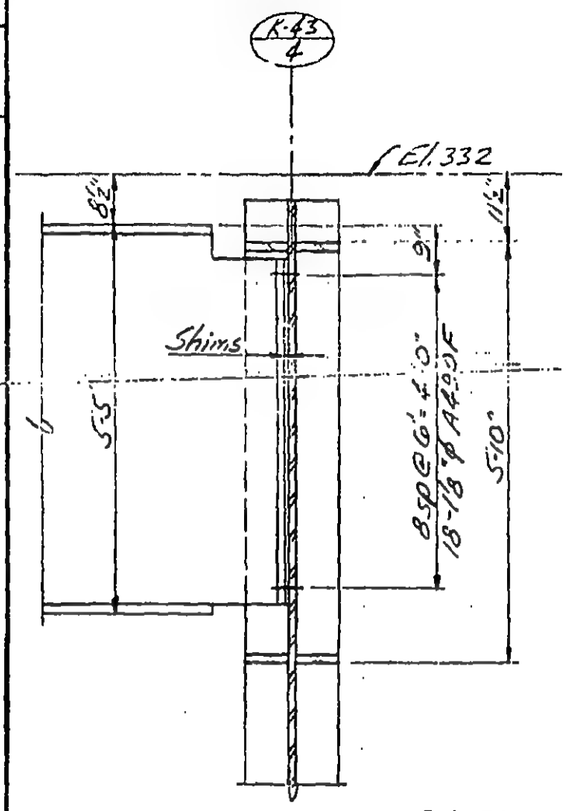

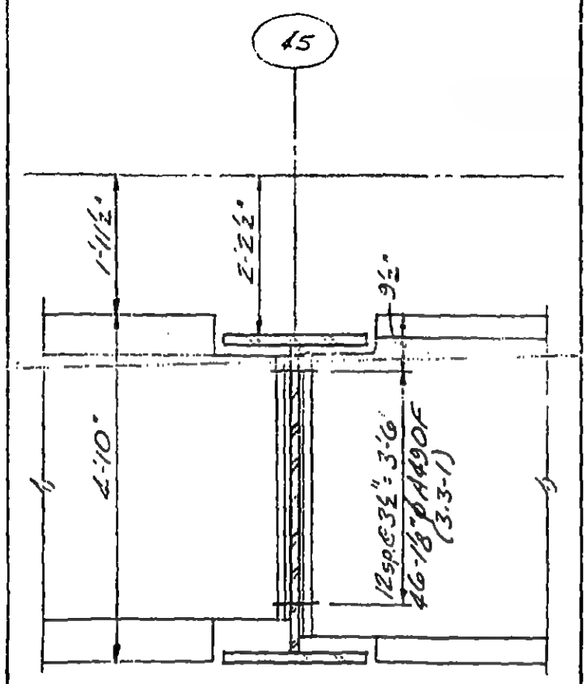

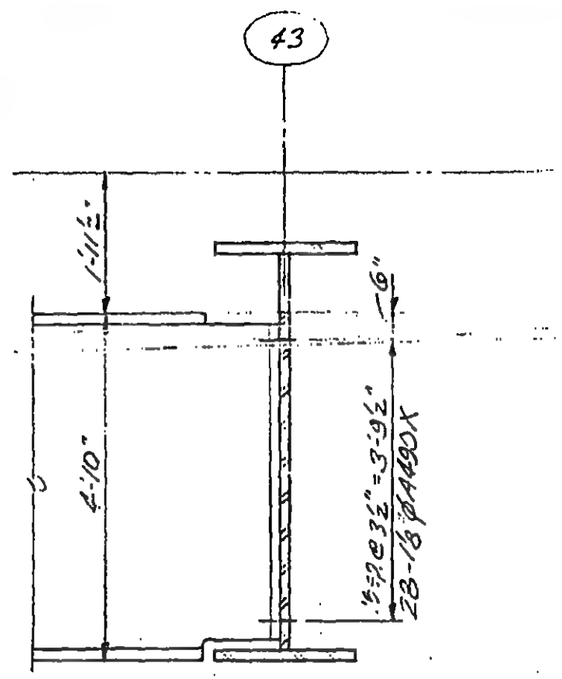

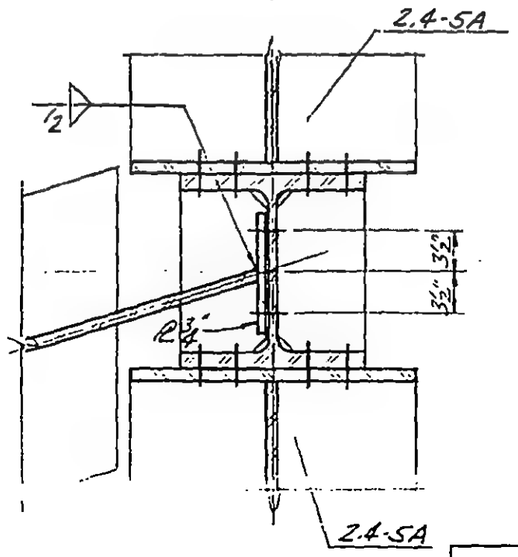

A

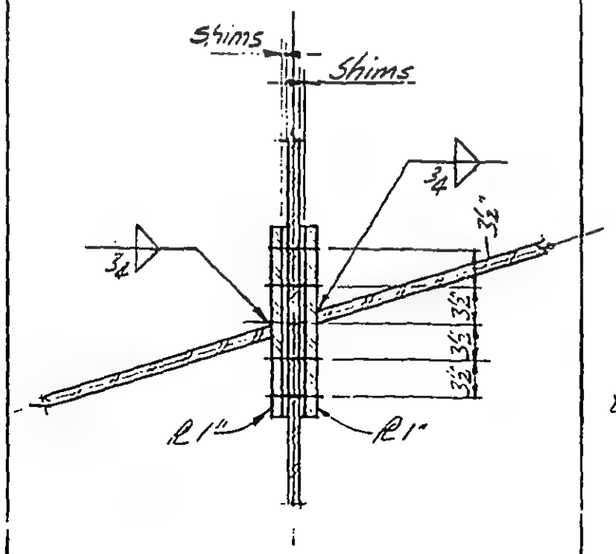

B

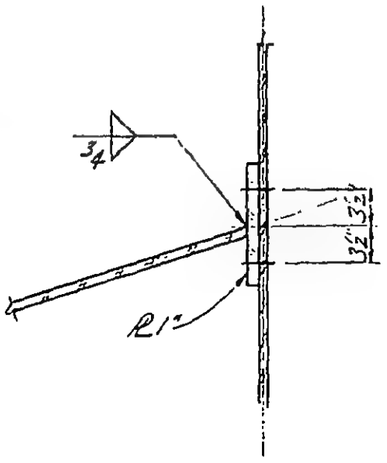

C

13-K3.3-5

LICENSED PROFESSIONAL ENGINEER
LESLIE E. ROBERTSON
No 34360
UNIVERSITY OF THE STATE OF NEW YORK

DESIGNED

DRAWN

REVIEWED

SKILLING, HELLE, CHRISTIANSEN, ROBERTSON — Structural & Civil Engineers

PROJECT: THE WORLD TRADE CENTER | TITLE: GIRDER CONNECTION DETAILS | DATE: 11-3-72

REVISIONS

Released for construction 11-20-72

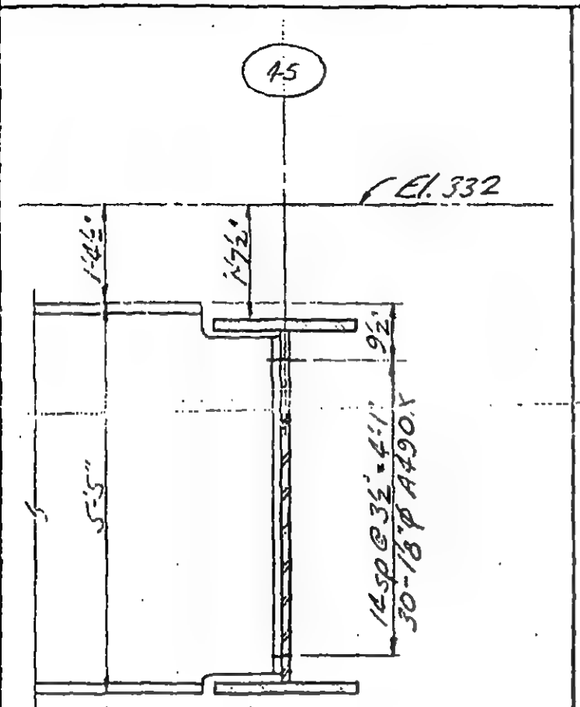

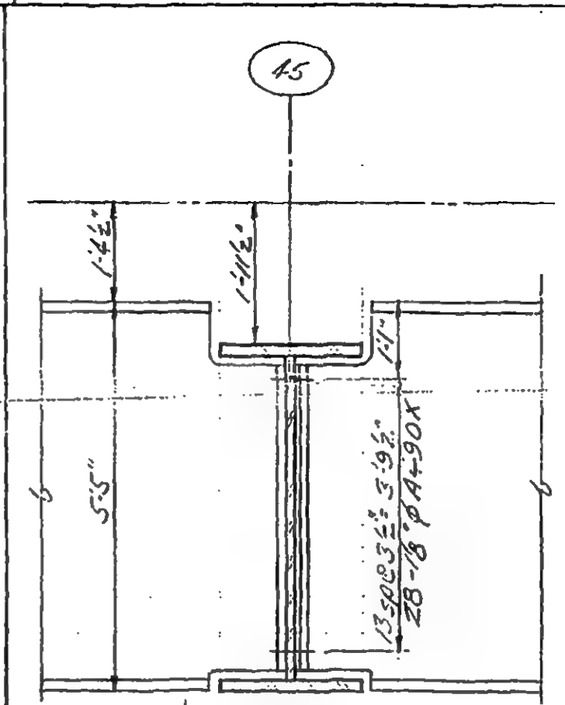

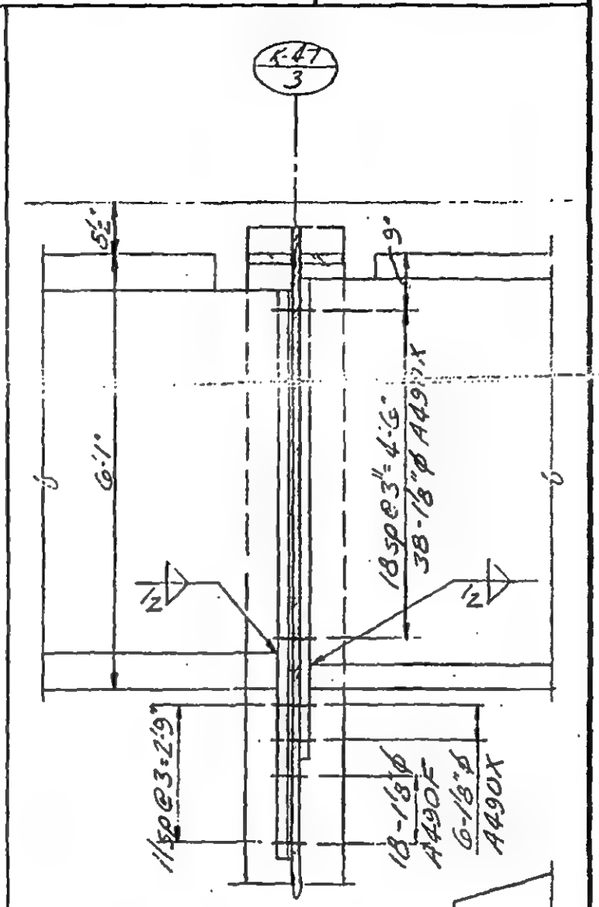

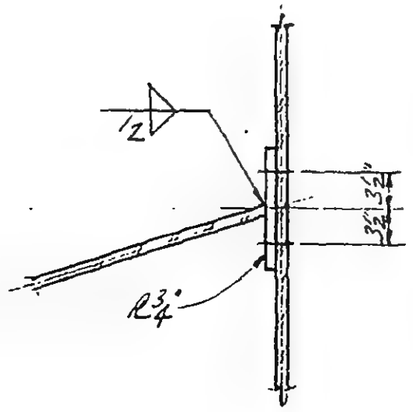

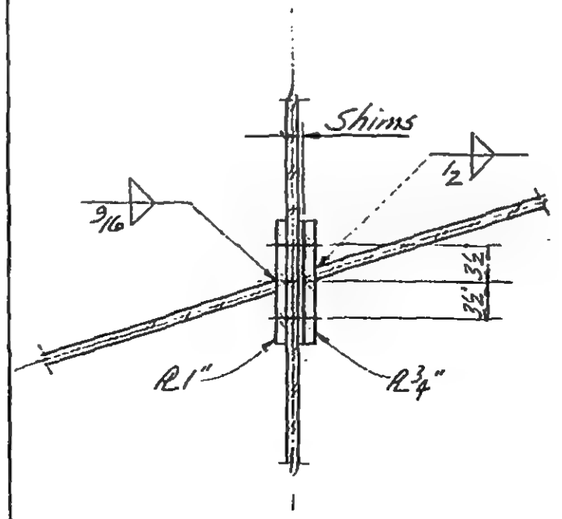

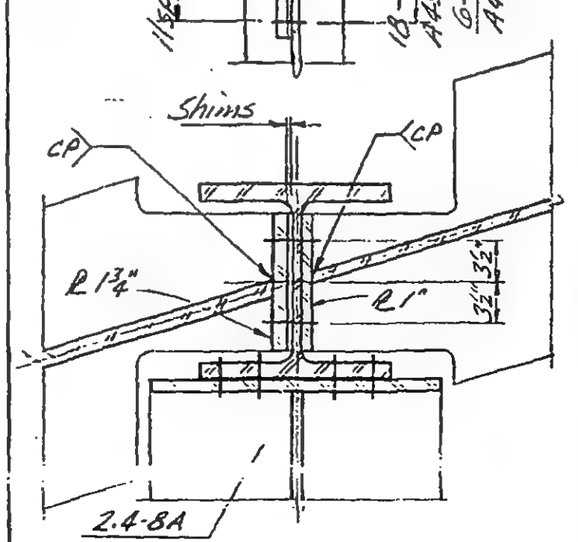

A | B | C

13-K3.3-6

LICENSED PROFESSIONAL ENGINEER
LESLIE E. ROBERTSON
No. 34360
UNIVERSITY OF THE STATE OF NEW YORK

DESIGNED

DRAWN

REVIEWED

SKILLING, HELLE. CHRISTIANSEN, ROBERTSON — Structural & Civil Engineers

PROJECT: THE WORLD TRADE CENTER | TITLE: GIRDER CONNECTION DETAILS | DATE: 11-3-72

REVISIONS

Released for construction 11-20-72

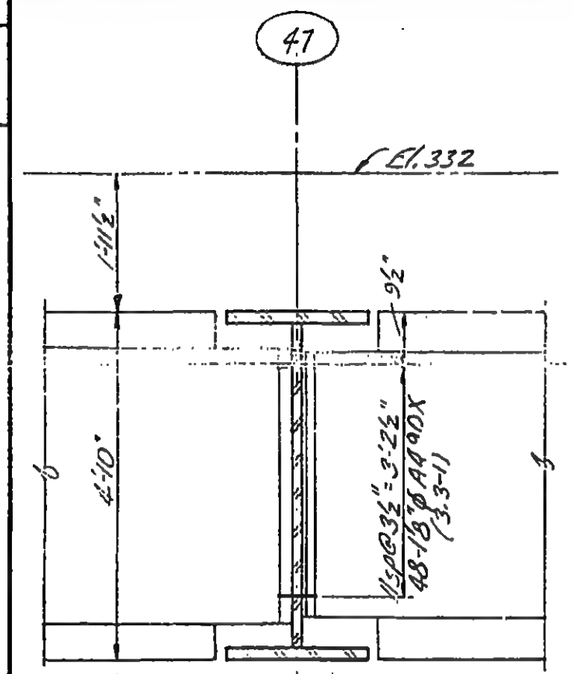

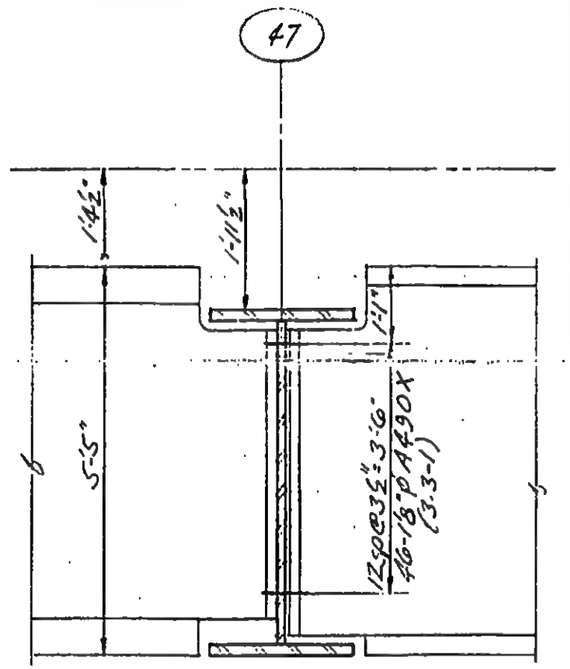

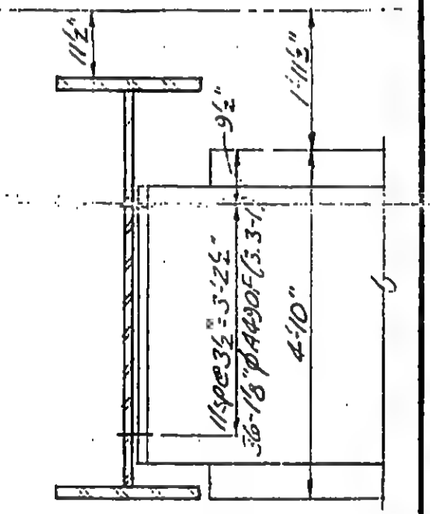

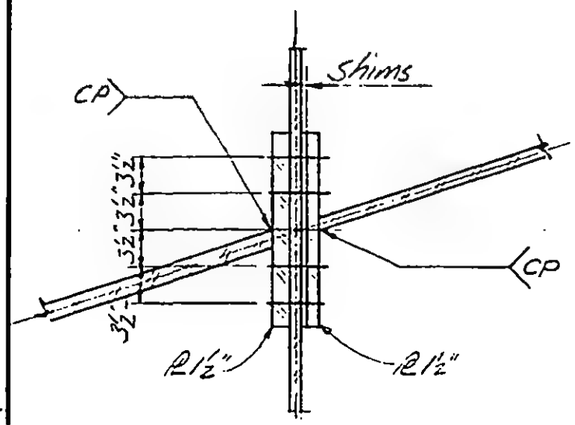

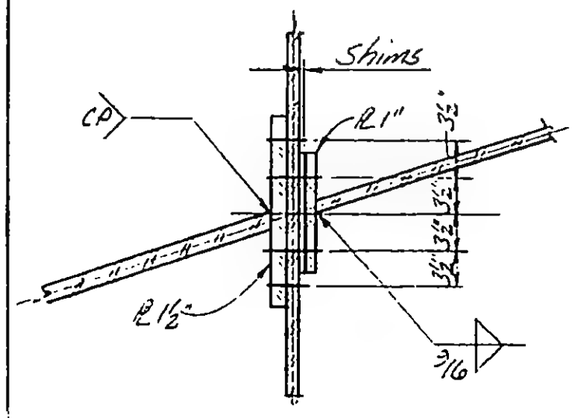

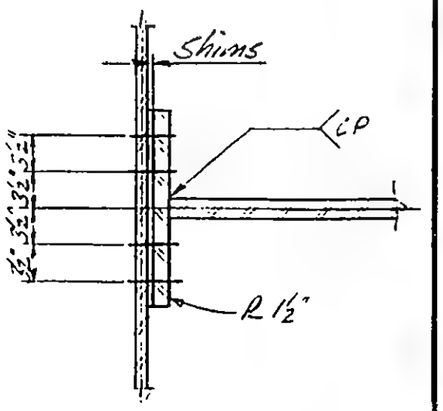

LICENSED PROFESSIONAL ENGINEER
LESLIE E. ROBERTSON
No 34360
UNIVERSITY OF THE STATE OF NEW YORK

DESIGNED

SKILLING, HELLE, CHRISTIANSEN, ROBERTSON — Structural & Civil Engineers

PROJECT: THE WORLD TRADE CENTER

TITLE: GIRDER CONNECTION DETAILS

DATE: 11-3-72

REVISIONS

Released for construction 11-20-72

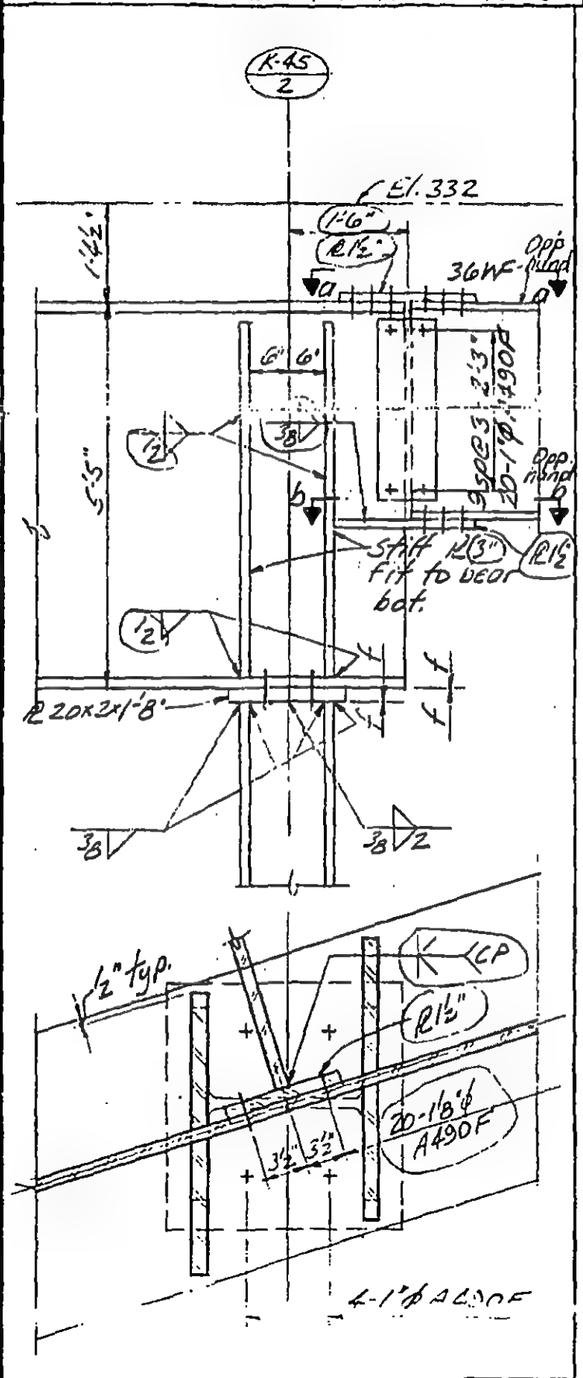

A

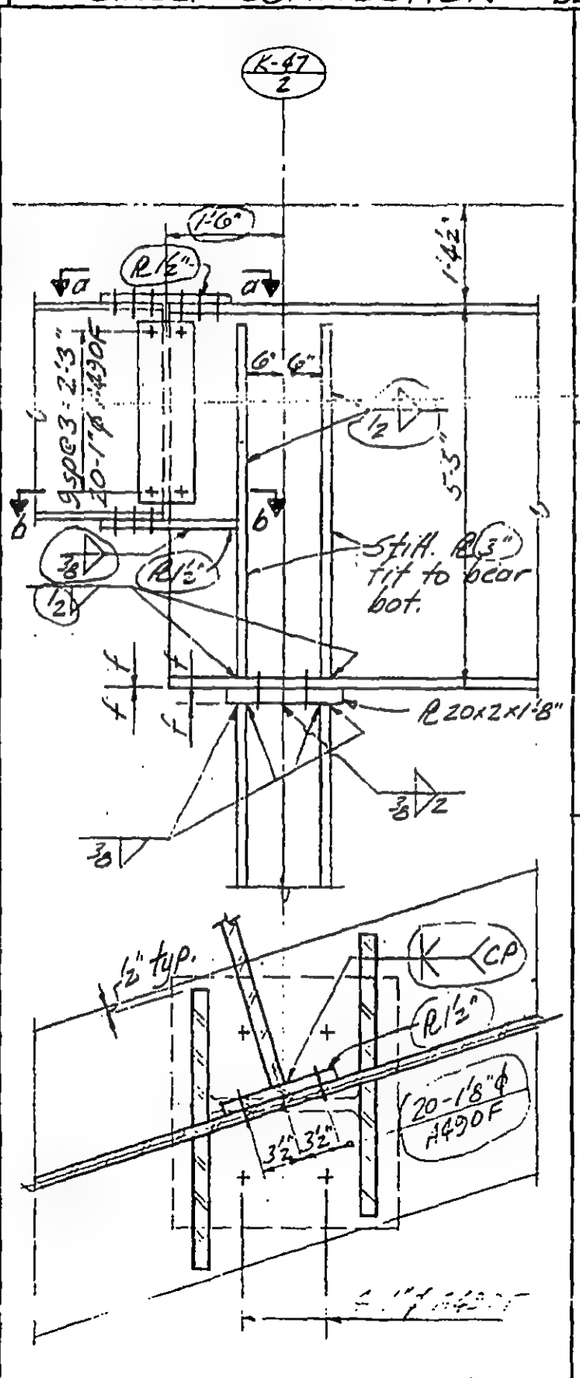

B

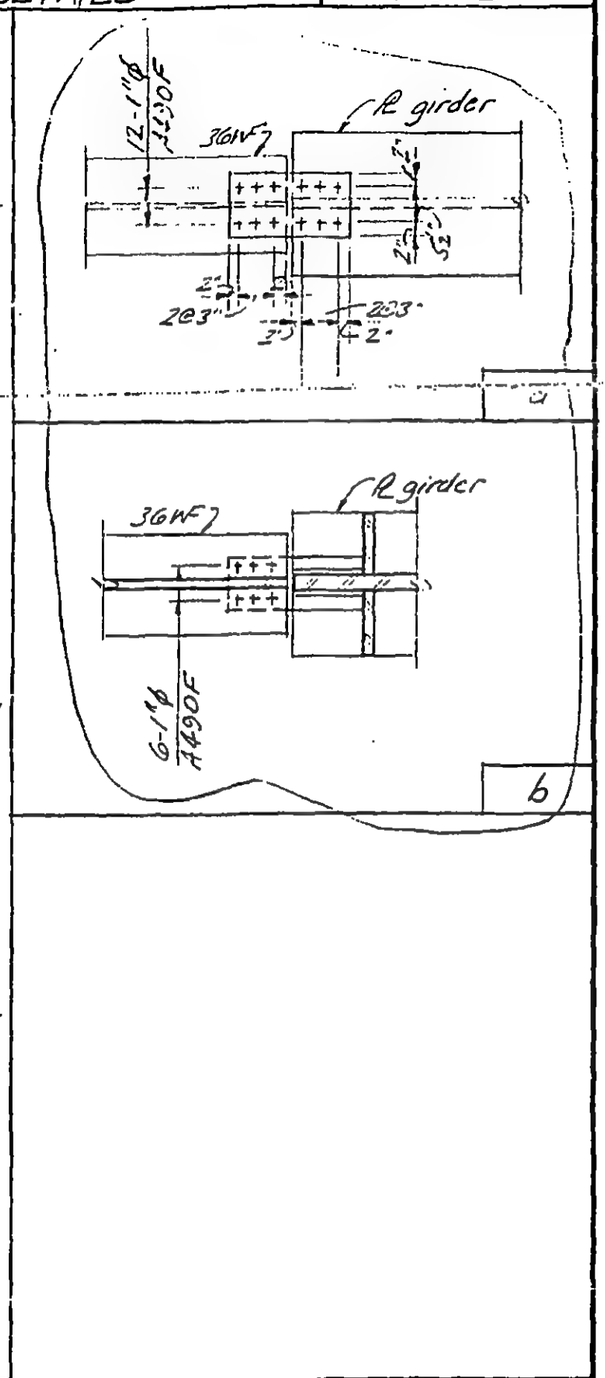

13-K3.3-B

LICENSED PROFESSIONAL ENGINEER
LESLIE E. ROBERTSON
No 34360
UNIVERSITY OF THE STATE OF NEW YORK

DESIGNED

DRAWN

REVIEWED

SKILLING, HELLE, CHRISTIANSEN, ROBERTSON — Structural & Civil Engineers

PROJECT: THE WORLD TRADE CENTER | TITLE: GIRDER CONNECTION DETAILS | DATE: 11-3-72

REVISIONS

Released for construction 11-20-72

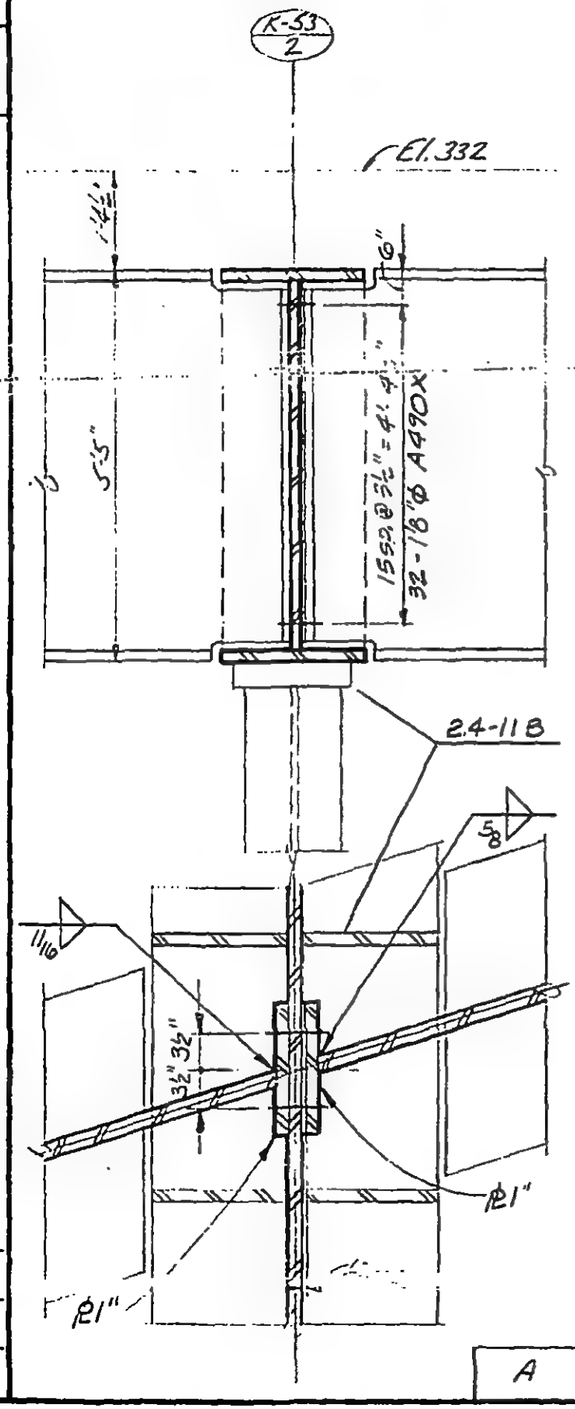

A

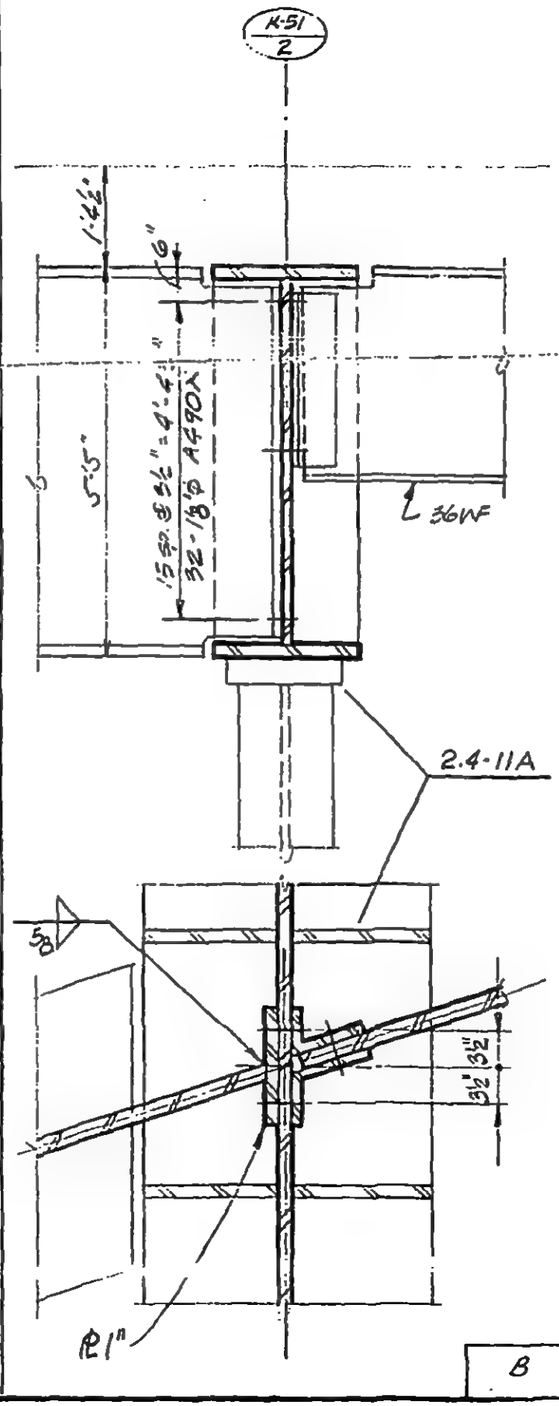

B

C

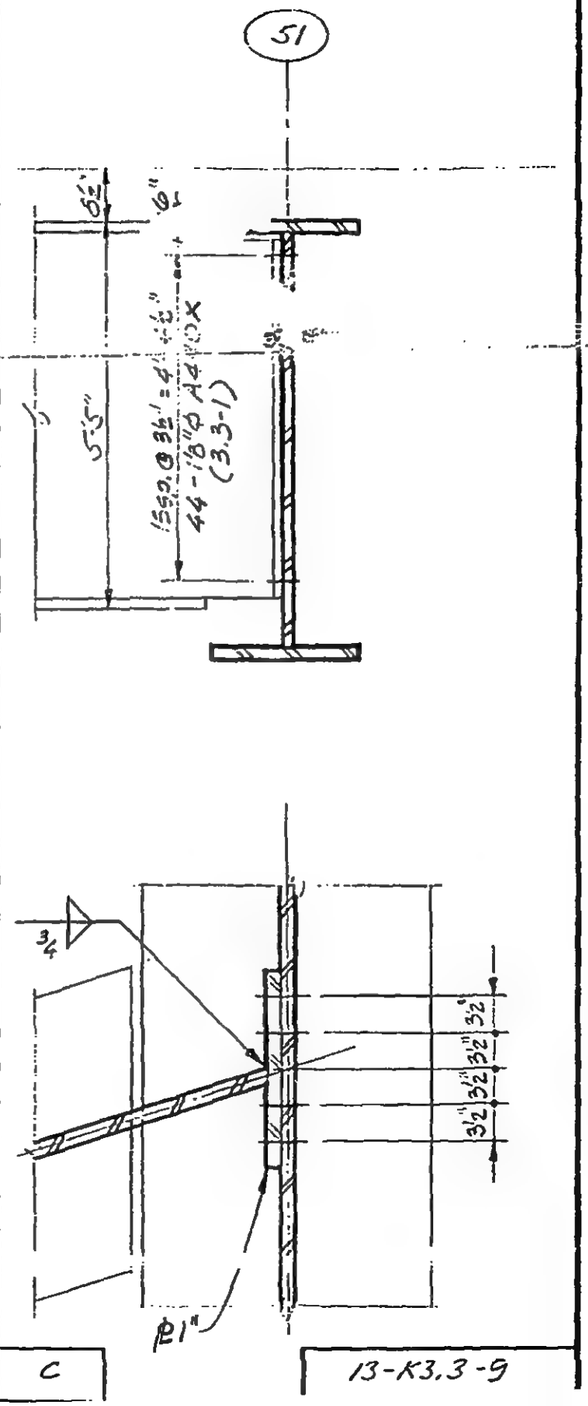

13-K3.3-9

LICENSED PROFESSIONAL ENGINEER
LESLIE E. ROBERTSON
No 34360
UNIVERSITY OF THE STATE OF NEW YORK

DESIGNED

DRAWN

REVIEWED

SKILLING, HELLE, CHRISTIANSEN, ROBERTSON — Structural & Civil Engineers

PROJECT: THE WORLD TRADE CENTER | TITLE: GIRDER CONNECTION DETAILS | DATE: 11-3-72

REVISIONS

Released for construction 11-20-72

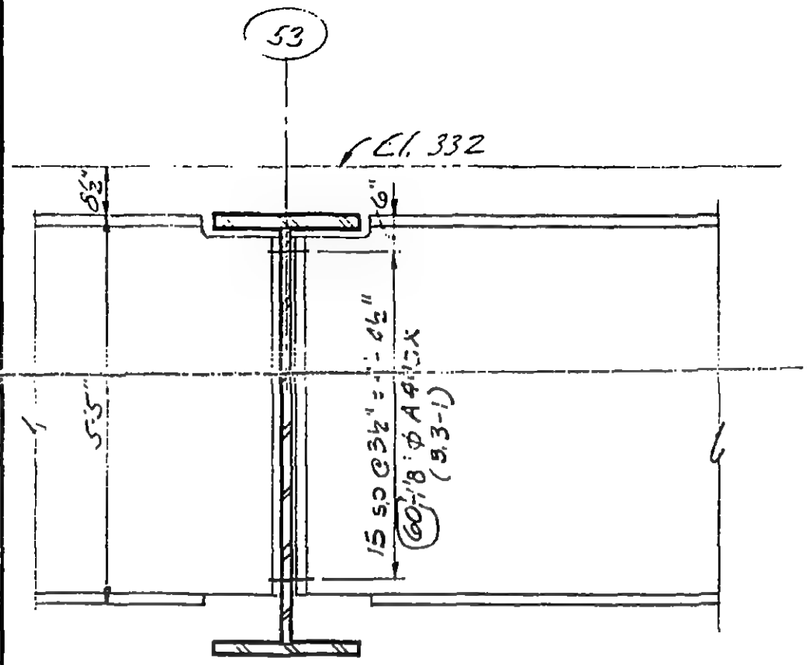

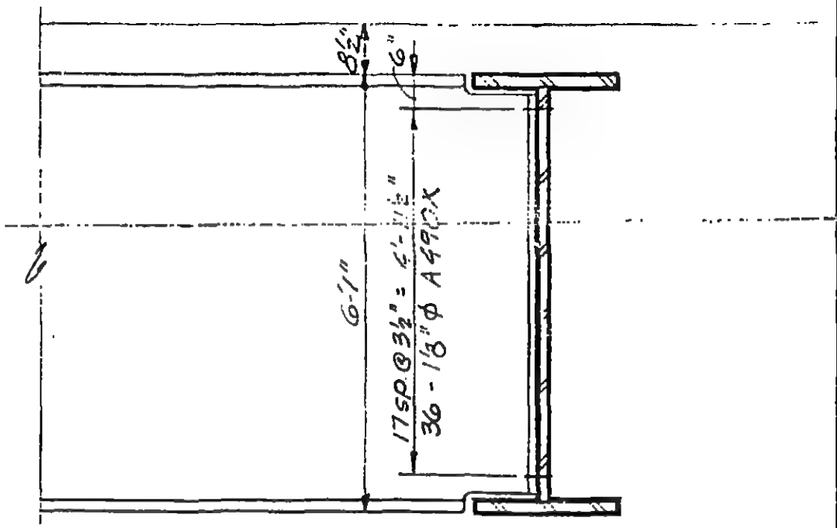

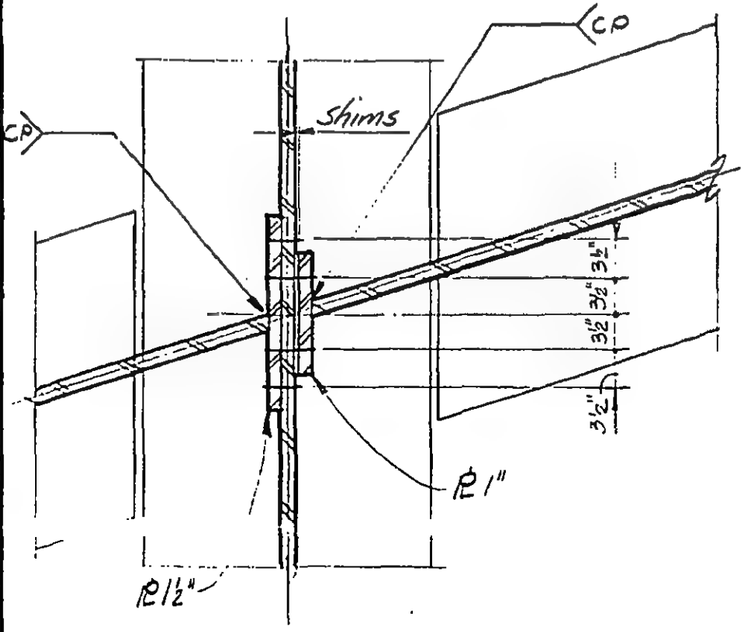

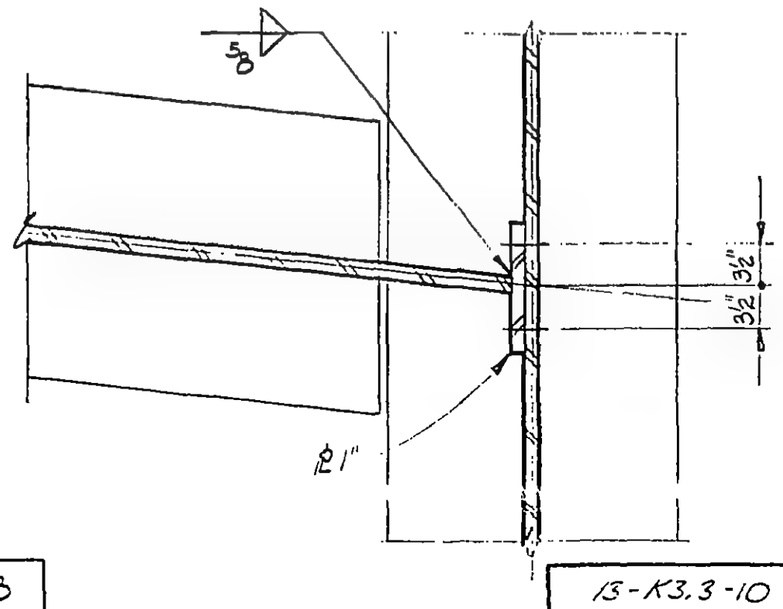

LICENSED PROFESSIONAL ENGINEER
LESLIE E. ROBERTSON
No 34360
UNIVERSITY OF THE STATE OF NEW YORK

DESIGNED

DRAWN

REVIEWED

A | B

13-K3.3-10

SKILLING, HELLE, CHRISTIANSEN, ROBERTSON — Structural & Civil Engineers

PROJECT: THE WORLD TRADE CENTER | TITLE: GIRDER CONNECTION DETAILS | DATE: 11-3-72

REVISIONS

Released for construction 11-20-72

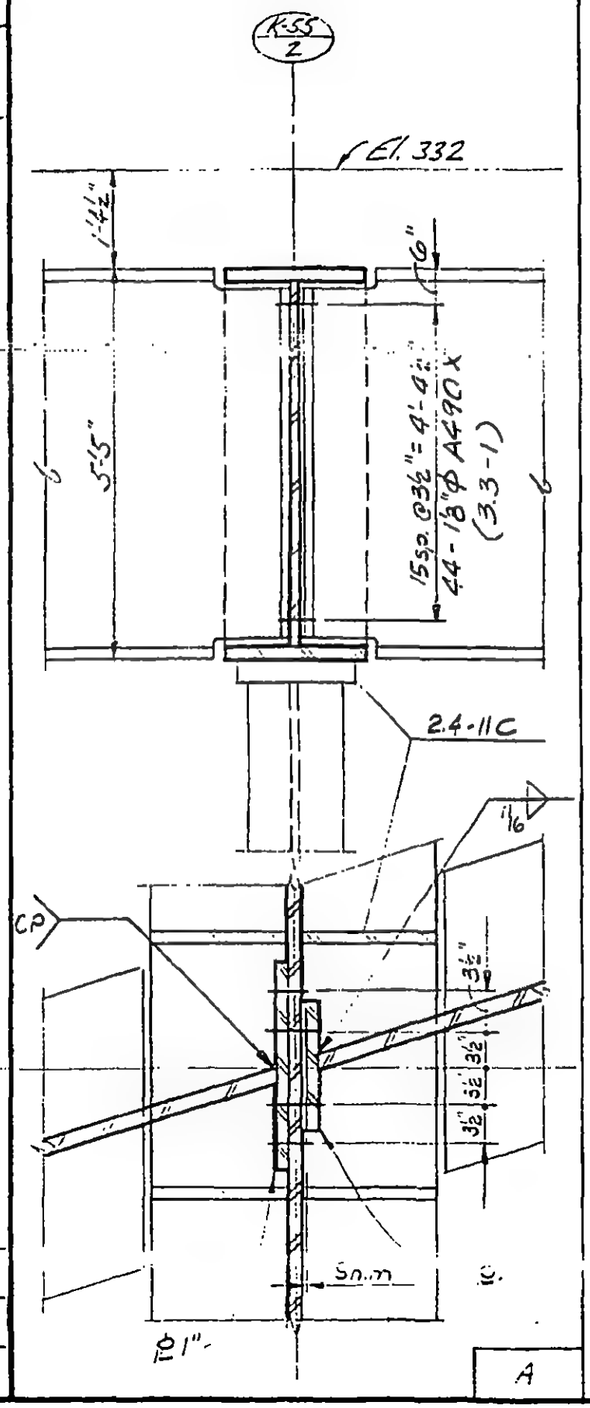

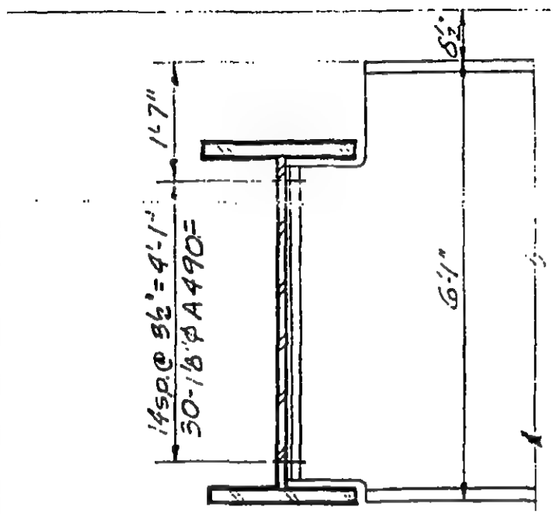

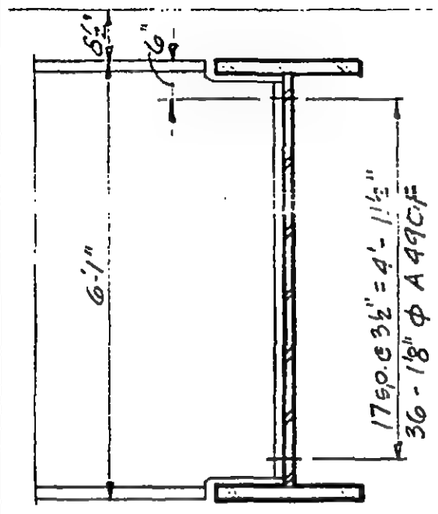

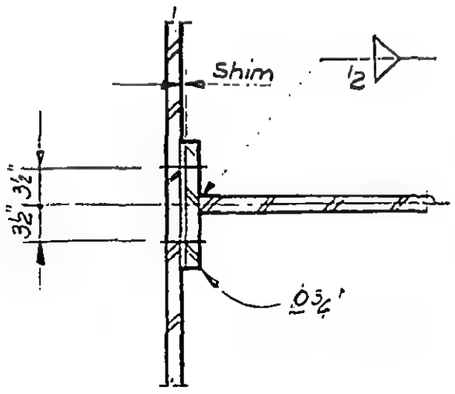

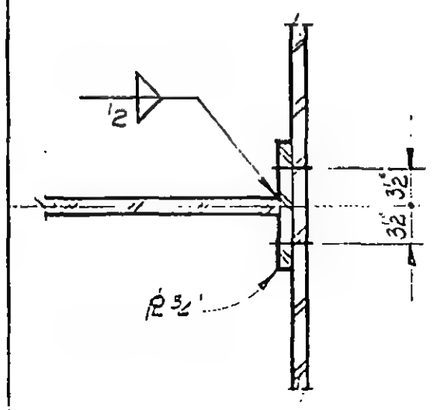

LICENSED PROFESSIONAL ENGINEER
LESLIE E. ROBERTSON
No 34360
UNIVERSITY OF THE STATE OF NEW YORK

DESIGNED

DRAWN

REVIEWED

A | B | C

13-K3.3-11

SKILLING, HELLE, CHRISTIANSEN, ROBERTSON — Structural & Civil Engineers

PROJECT: THE WORLD TRADE CENTER

TITLE: GIRDER CONNECTION DETAILS

DATE: 11-3-72

REVISIONS

Released for construction 11-20-72

4-20-73

6-4-73

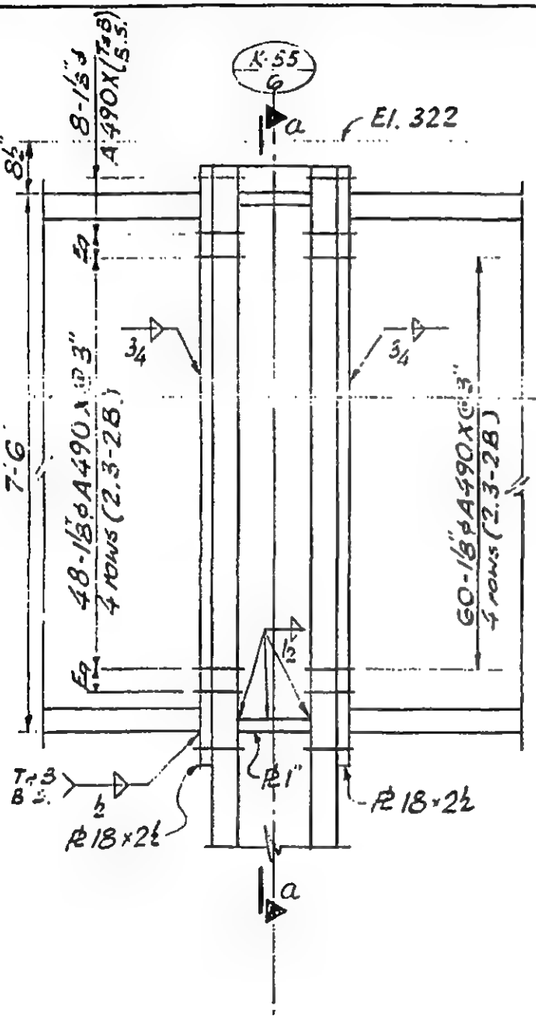

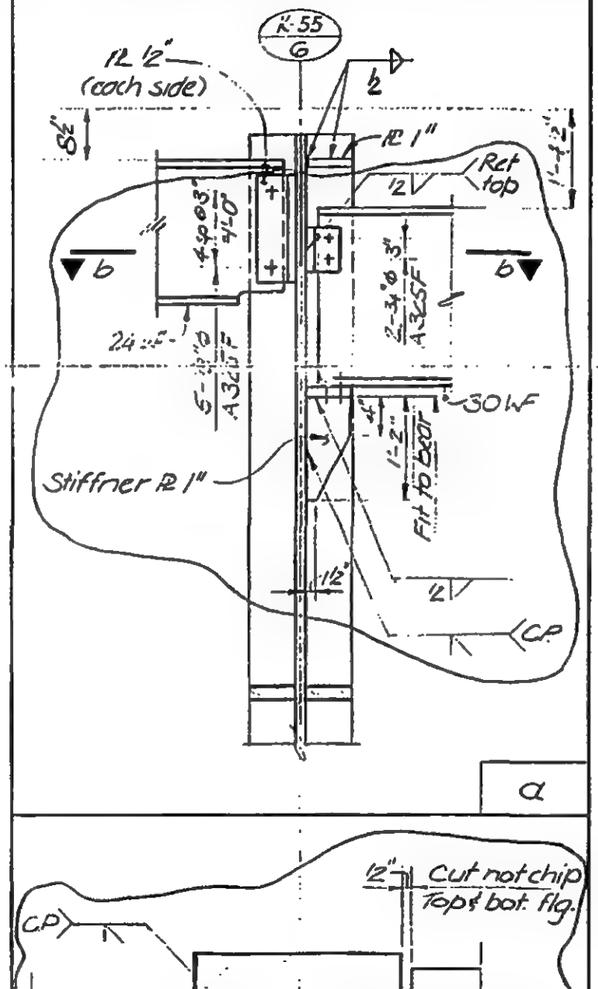

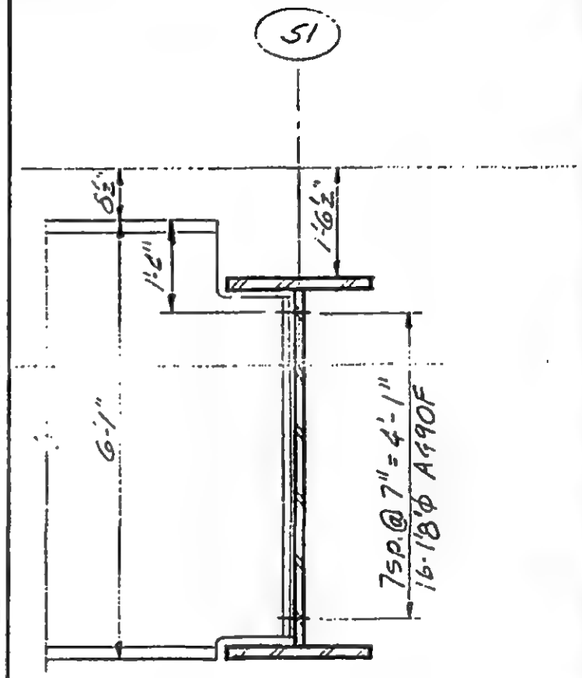

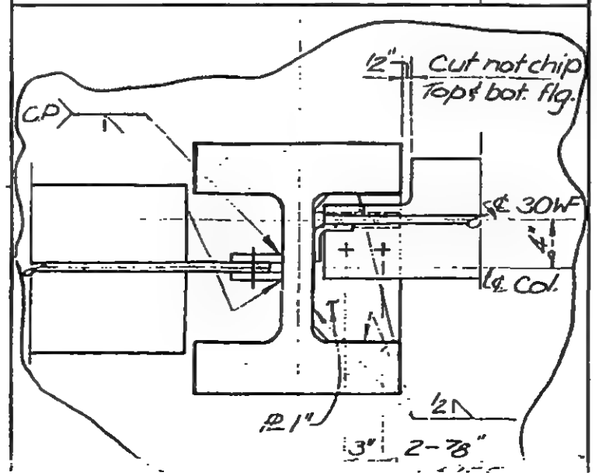

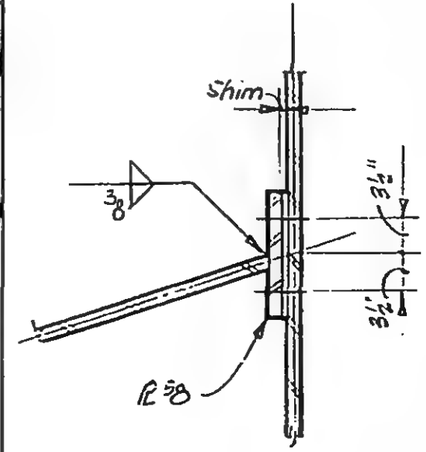

LICENSED PROFESSIONAL ENGINEER
LESLIE E. ROBERTSON
No 34360
UNIVERSITY OF THE STATE OF NEW YORK

DESIGNED

SKILLING, HELLE, CHRISTIANSEN, ROBERTSON — Structural & Civil Engineers

PROJECT: THE WORLD TRADE CENTER

TITLE: GIRDER CONNECTION DETAILS

DATE: 11-3-72

REVISIONS

Released for construction 11-20-72

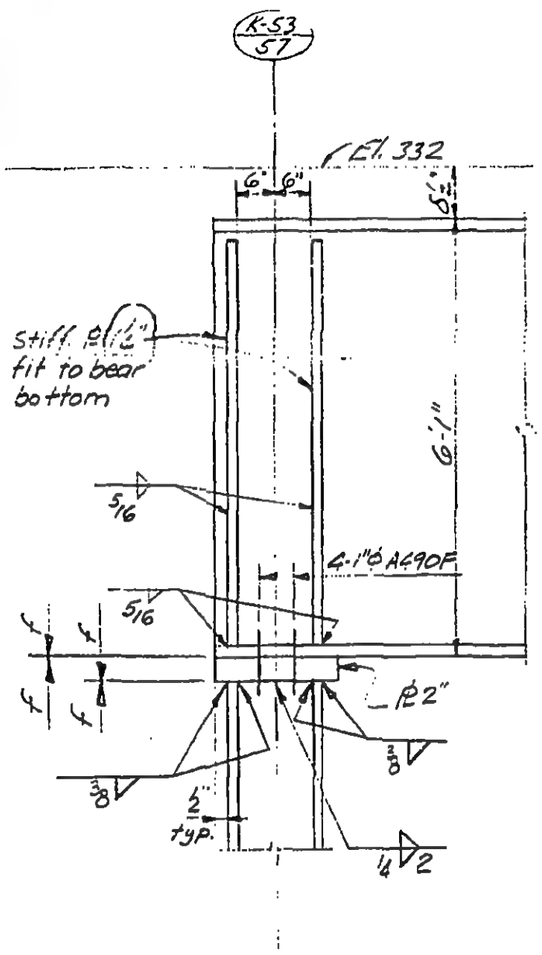

A

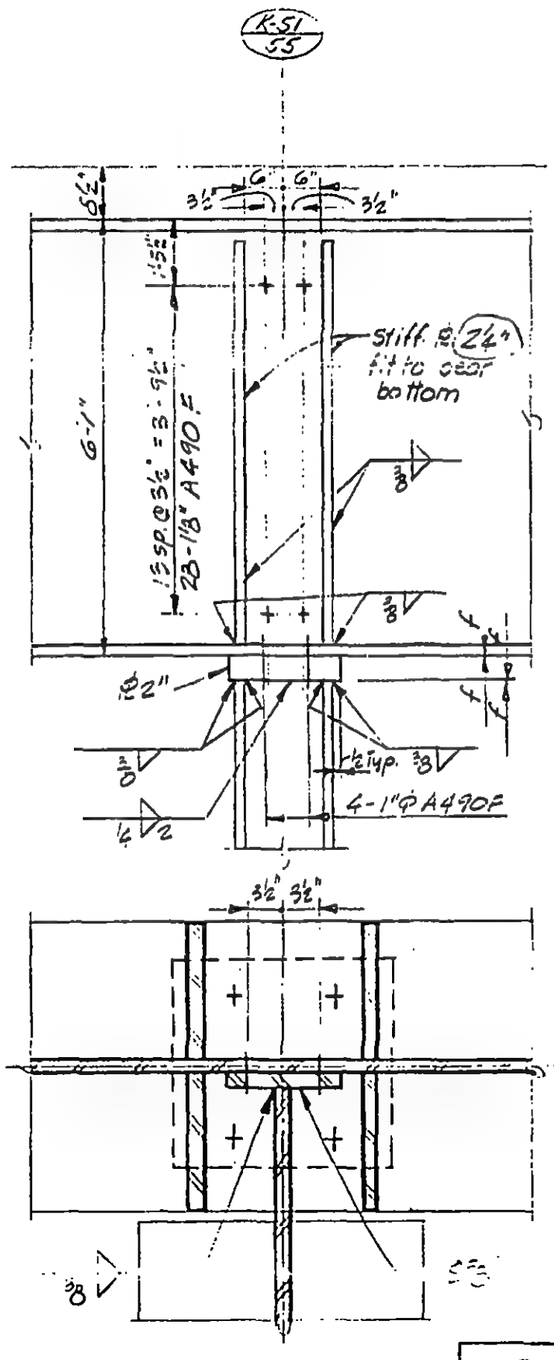

B

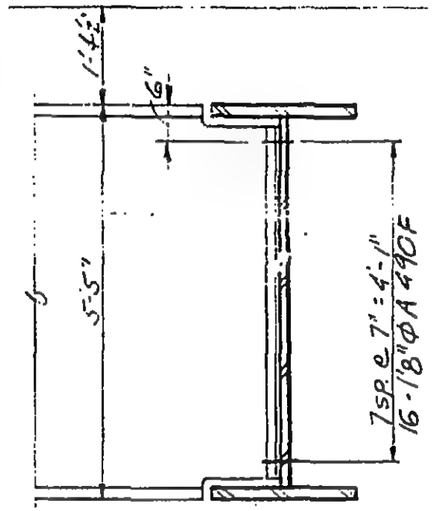

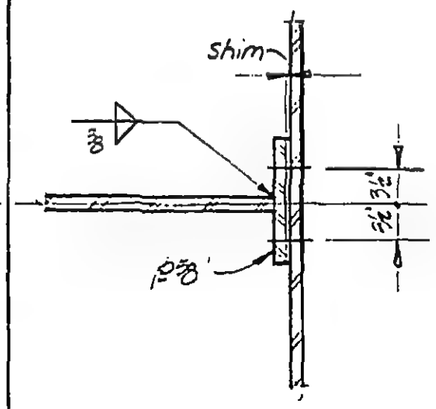

C

LICENSED PROFESSIONAL ENGINEER
LESLIE E. ROBERTSON
No 34360
UNIVERSITY OF THE STATE OF NEW YORK

DESIGNED

DRAWN

REVIEWED

13-K3.3-13

SKILLING, HELLE, CHRISTIANSEN, ROBERTSON — Structural & Civil Engineers

PROJECT: THE WORLD TRADE CENTER | TITLE: GIRDER CONNECTION DETAILS | DATE: 11-3-72

REVISIONS

Released for construction 11-20-72

2-5-73

6-4-73

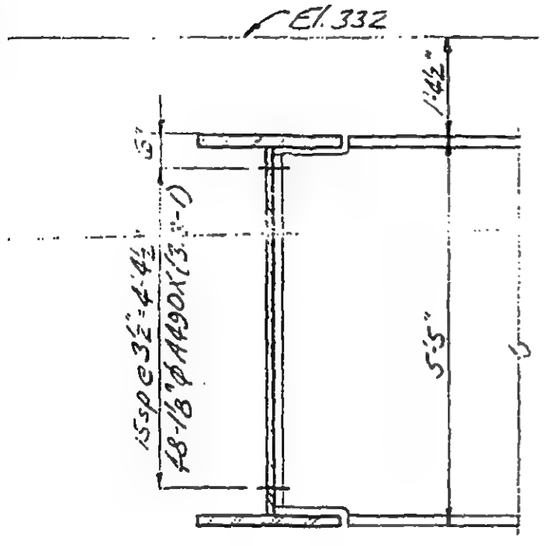

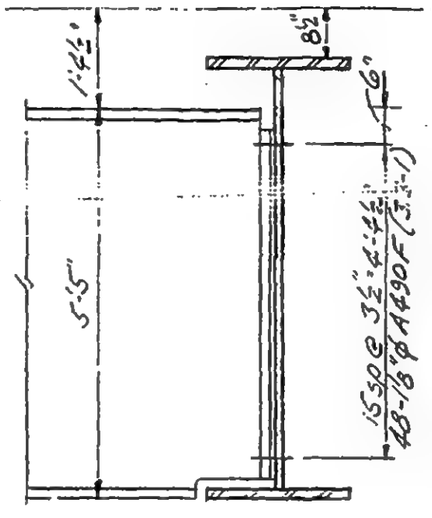

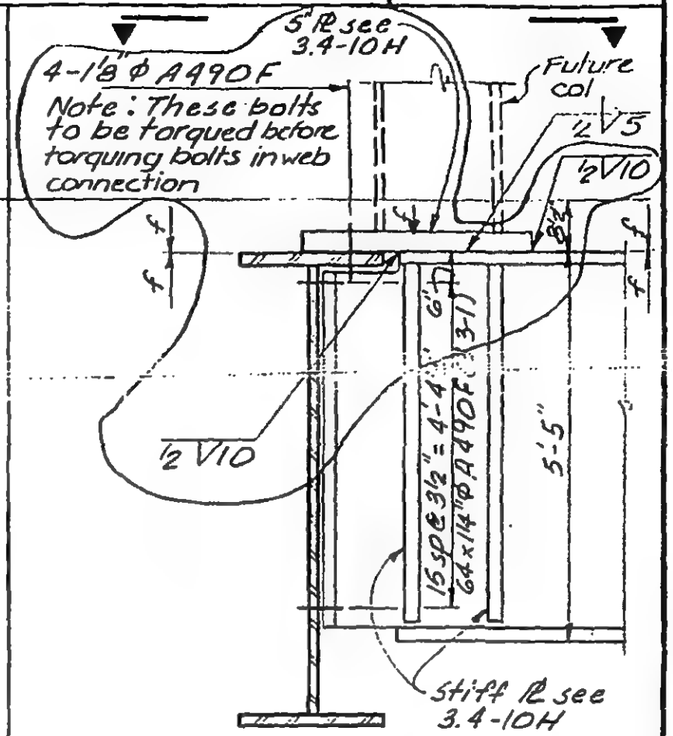

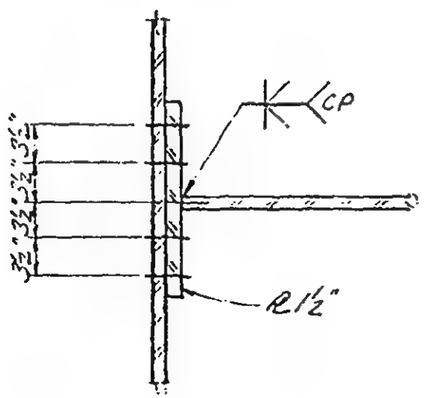

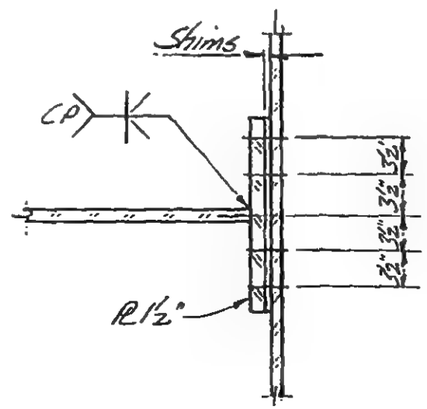

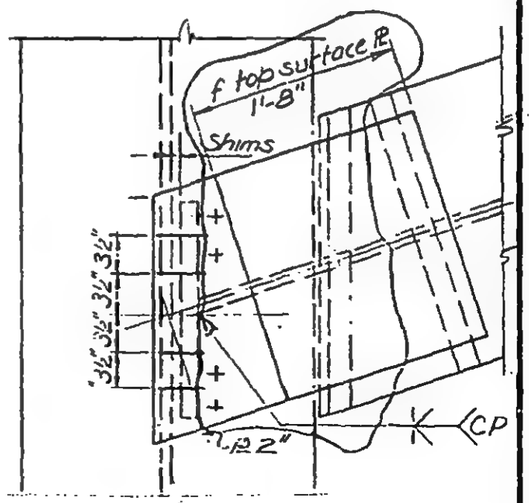

LICENSED PROFESSIONAL ENGINEER — LESLIE E. ROBERTSON — No. 34360 — UNIVERSITY OF THE STATE OF NEW YORK

DESIGNED

DRAWN

REVIEWED

A | B | C

13-K3.3-14

SKILLING, HELLE, CHRISTIANSEN, ROBERTSON — Structural & Civil Engineers

PROJECT THE WORLD TRADE CENTER | TITLE GIRDER CONNECTION DETAILS | DATE 11-3-72

REVISIONS

Released for construction 11-20-72

2-5-73

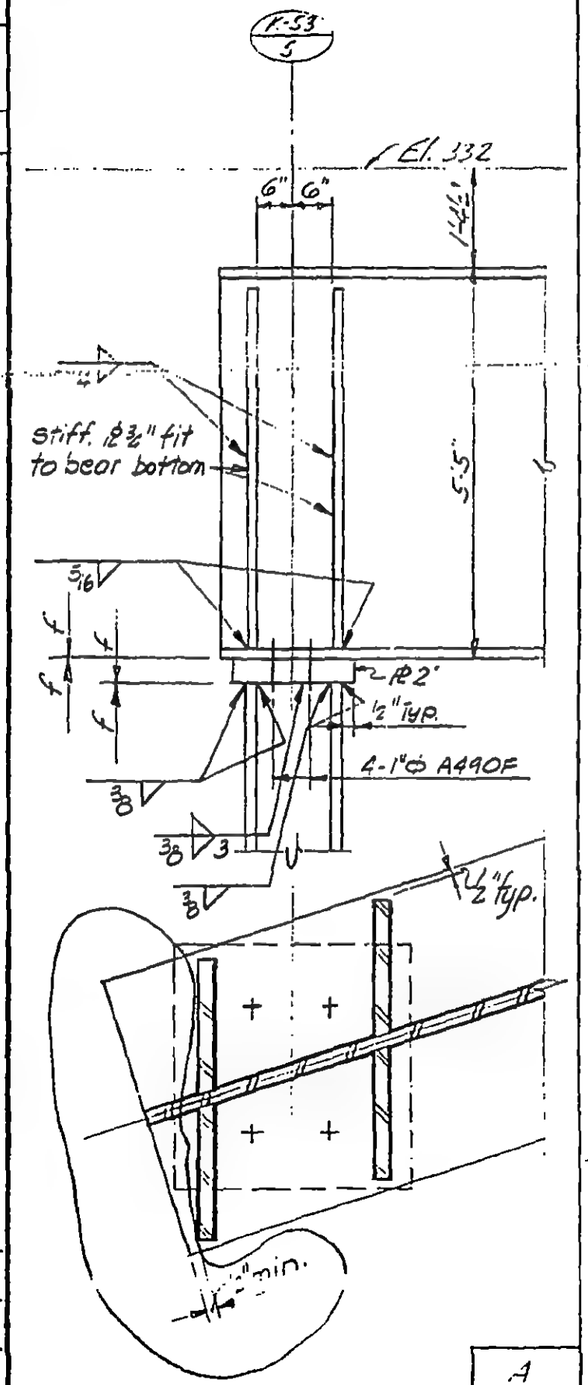

A

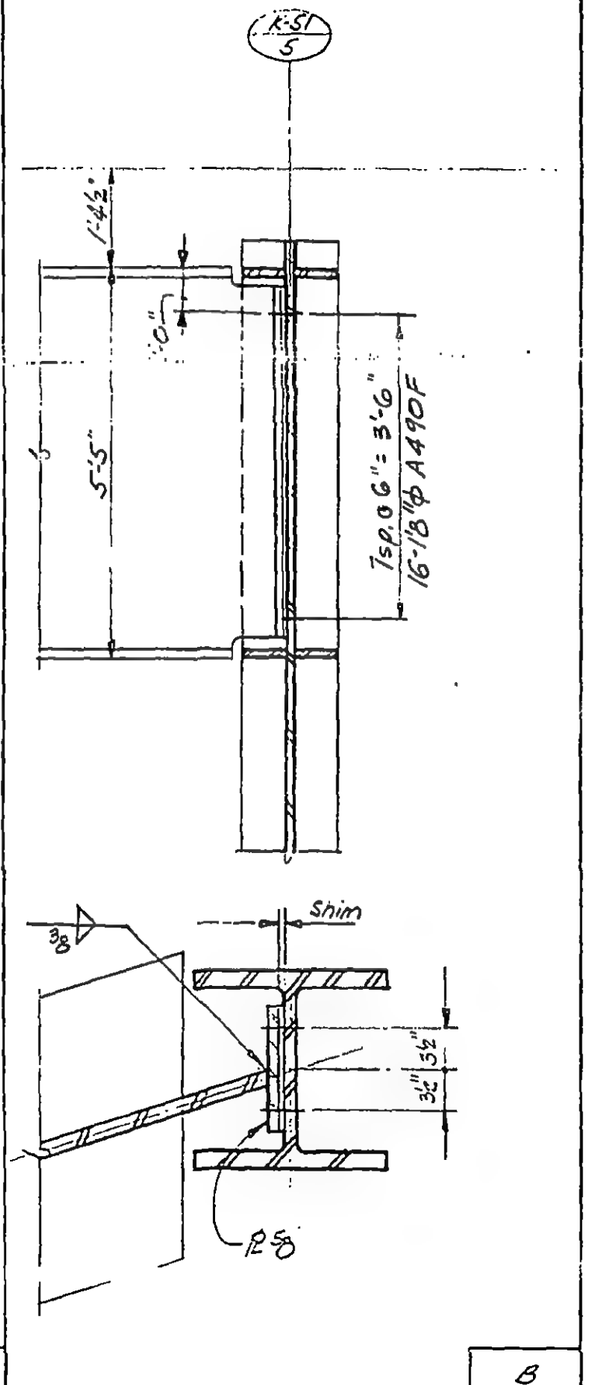

B

LICENSED PROFESSIONAL ENGINEER LESLIE E. ROBERTSON NO 34360 UNIVERSITY OF THE STATE OF NEW YORK

DESIGNED

DRAWN

REVIEWED

13-K3.3-15

SKILLING, HELLE, CHRISTIANSEN, ROBERTSON — Structural & Civil Engineers

PROJECT: THE WORLD TRADE CENTER | TITLE: GIRDER CONNECTION DETAILS | DATE: 11-3-72

REVISIONS

Released for construction 11-20-72

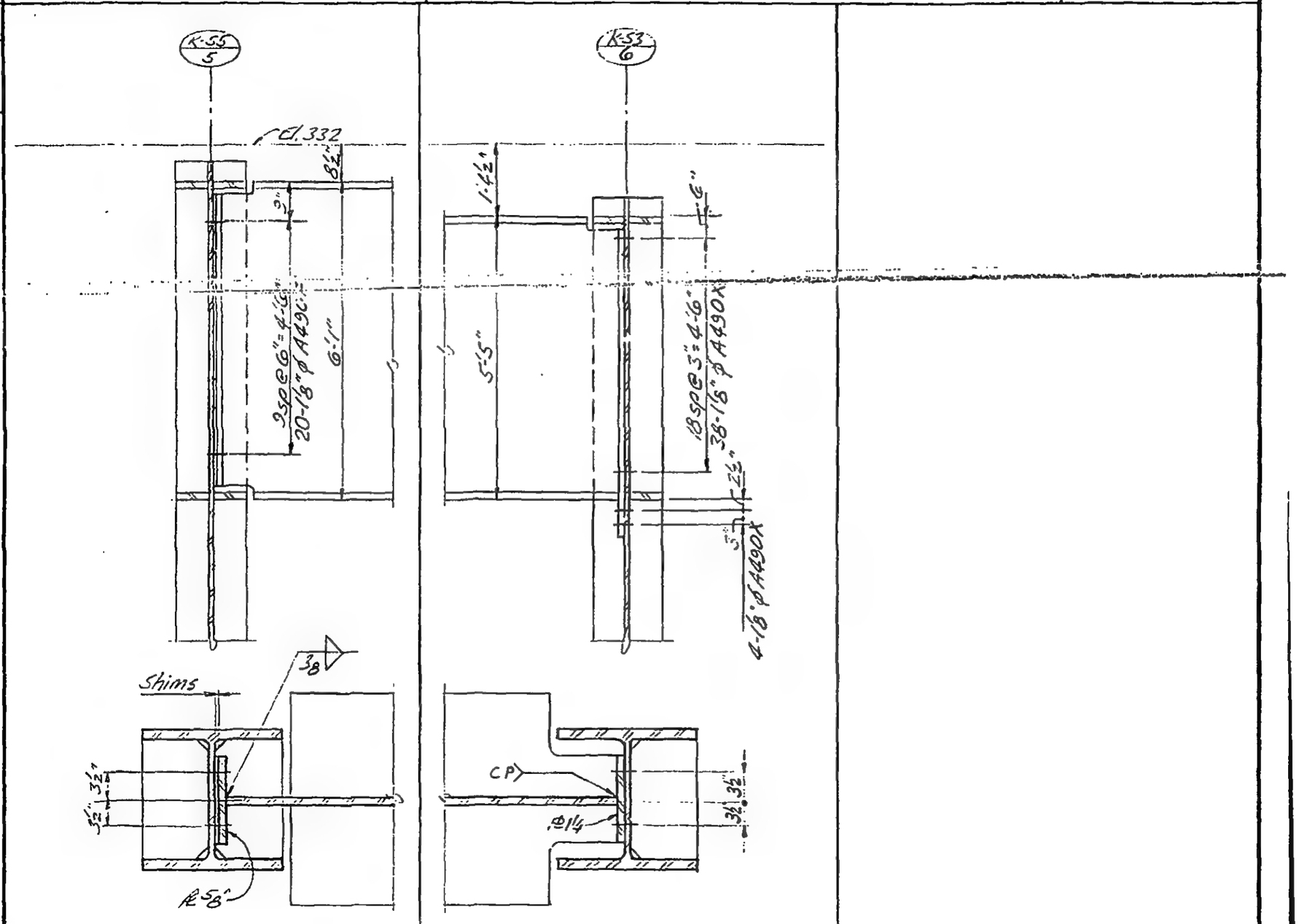

A

B

13-K3.3-16

LICENSED PROFESSIONAL ENGINEER
LESLIE E. ROBERTSON
No 34360
UNIVERSITY OF THE STATE OF NEW YORK

DESIGNED

DRAWN

REVIEWED

SKILLING, HELLE, CHRISTIANSEN, ROBERTSON — Structural & Civil Engineers

PROJECT: THE WORLD TRADE CENTER

TITLE: GIRDER CONNECTION DETAILS

DATE: 11-3-72

REVISIONS

Released for construction 11-20-72

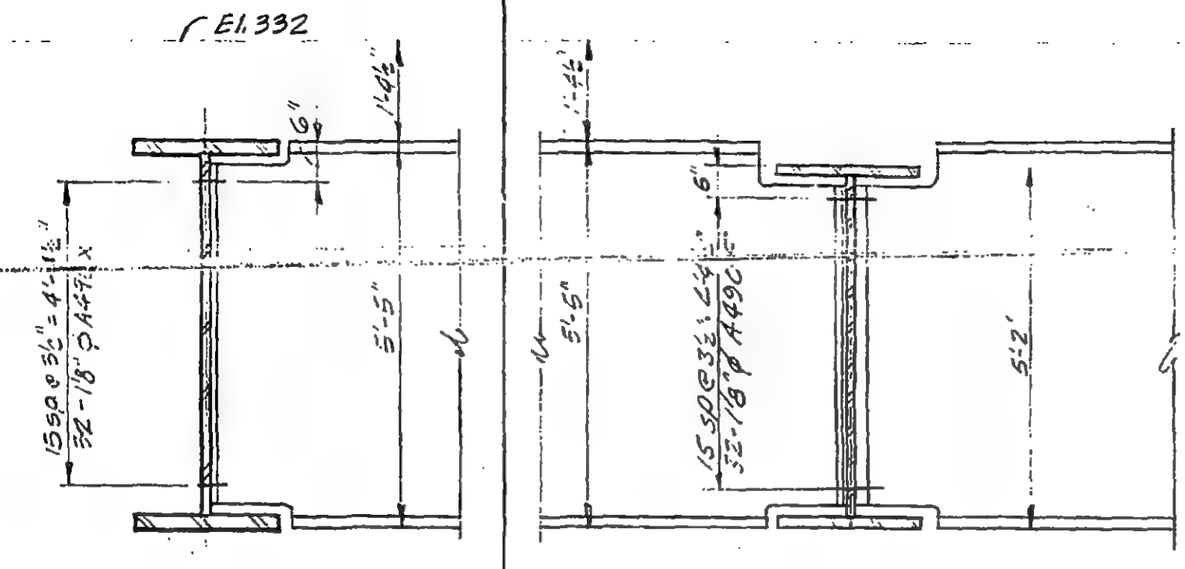

For cont. See 3.4-12A

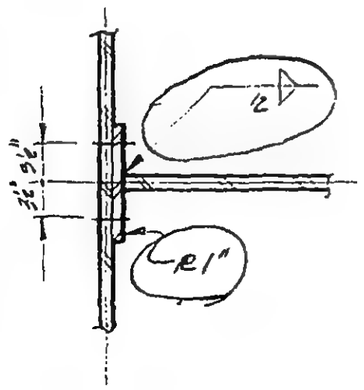

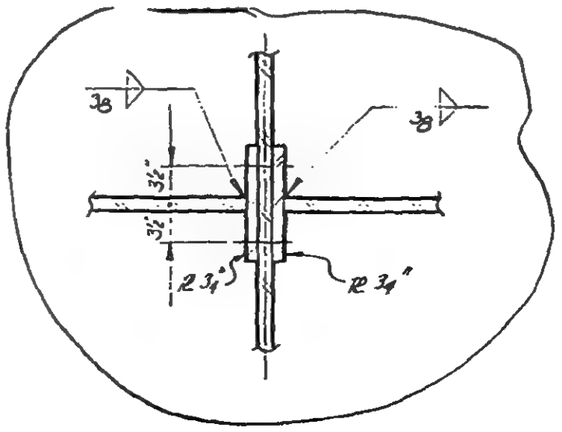

LICENSED PROFESSIONAL ENGINEER — LESLIE E. ROBERTSON — NO 34980 — UNIVERSITY OF THE STATE OF NEW YORK

DESIGNED

DRAWN

REVIEWED

A | B

13-K3.3-17

SKILLING, HELLE, CHRISTIANSEN, ROBERTSON — Structural & Civil Engineers

PROJECT: THE WORLD TRADE CENTER | TITLE: GIRDER DETAILS AT FUTURE COLUMNS | DATE: 11-3-72

REVISIONS

General Rev. RELEASED FOR CONSTRUCTION 11-24-72

2-5-73

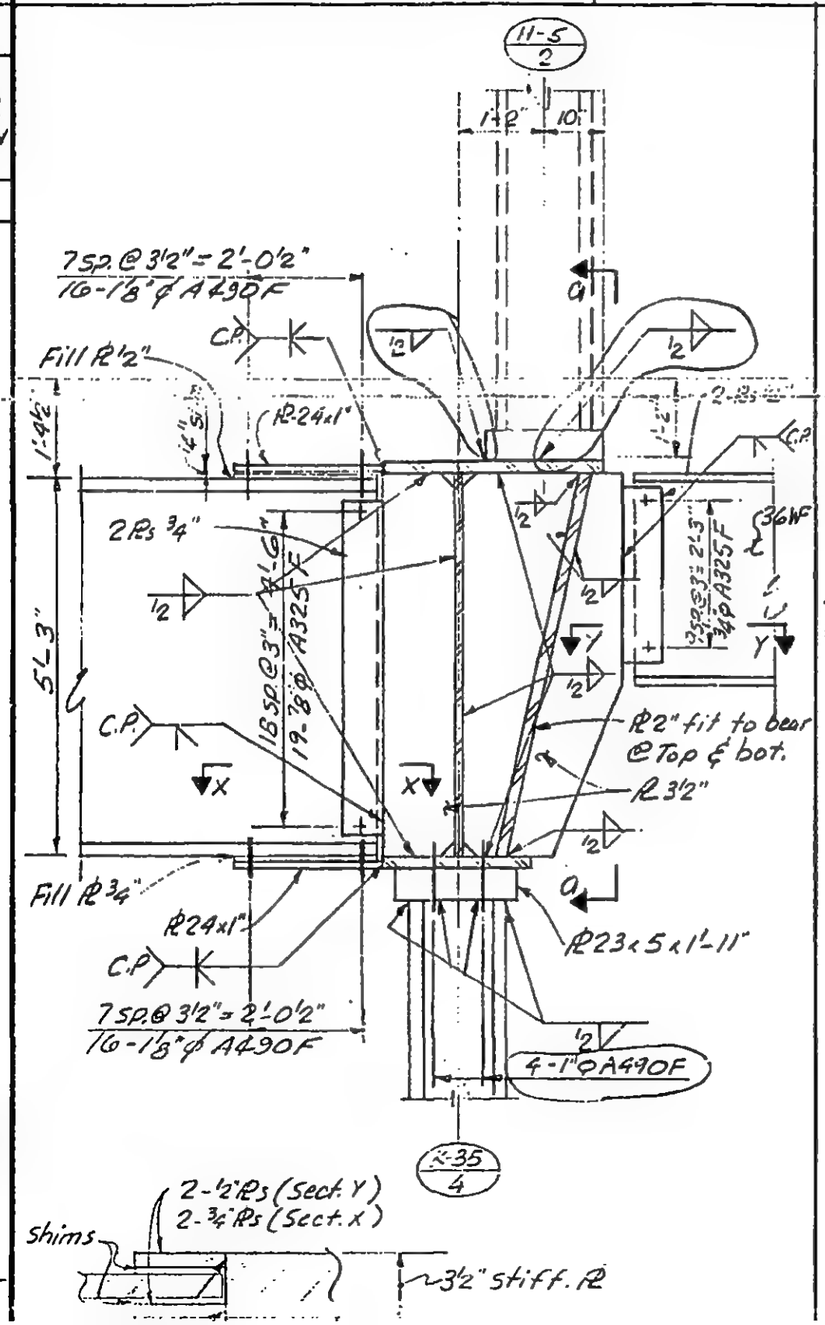

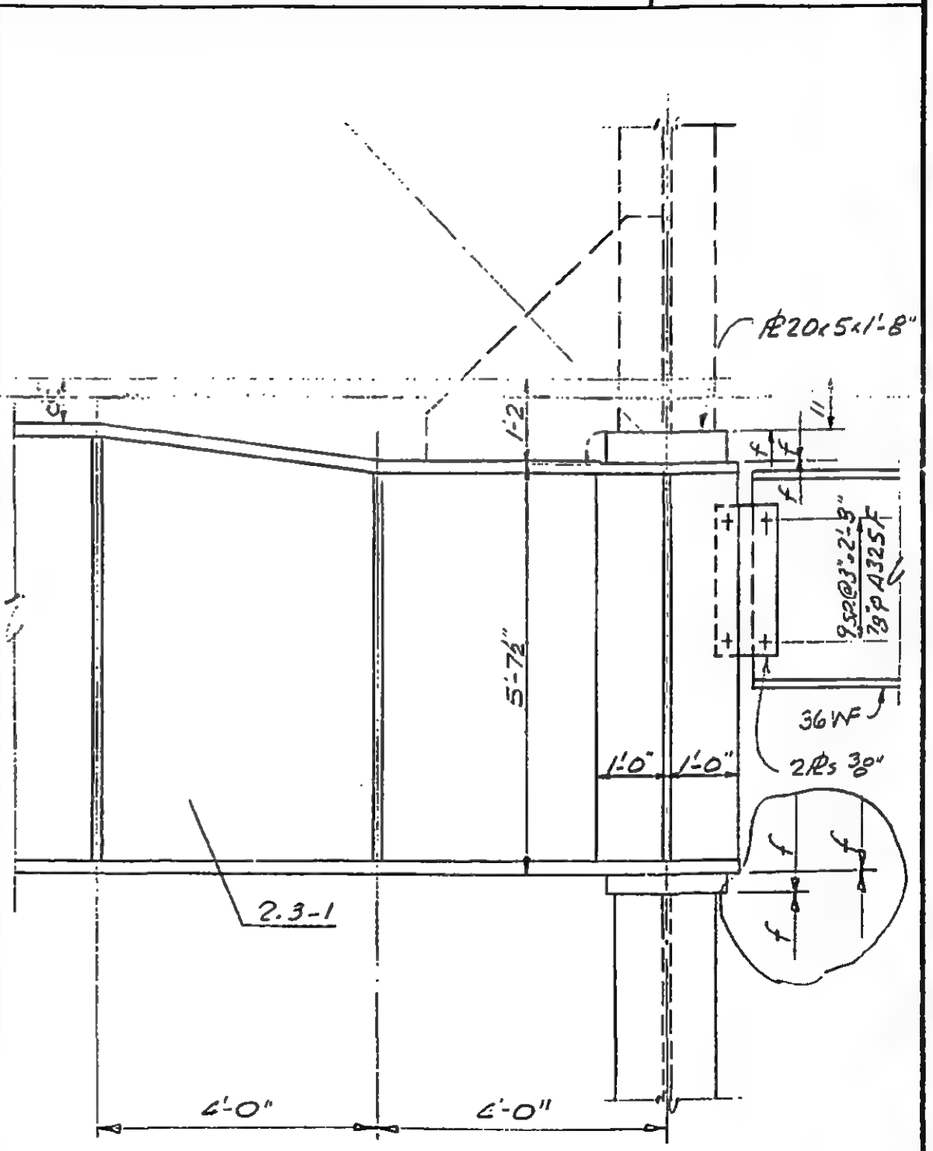

LICENSED PROFESSIONAL ENGINEER — LESLIE E. ROBERTSON — No 34360 — UNIVERSITY OF THE STATE OF NEW YORK

DESIGNED

SKILLING, HELLE, CHRISTIANSEN, ROBERTSON — Structural & Civil Engineers

PROJECT THE WORLD TRADE CENTER | TITLE GIRDER DETAILS AT FUTURE COLUMNS | DATE 11-3-72

REVISIONS

General Revision Released for construction 11-24-72

2-5-73

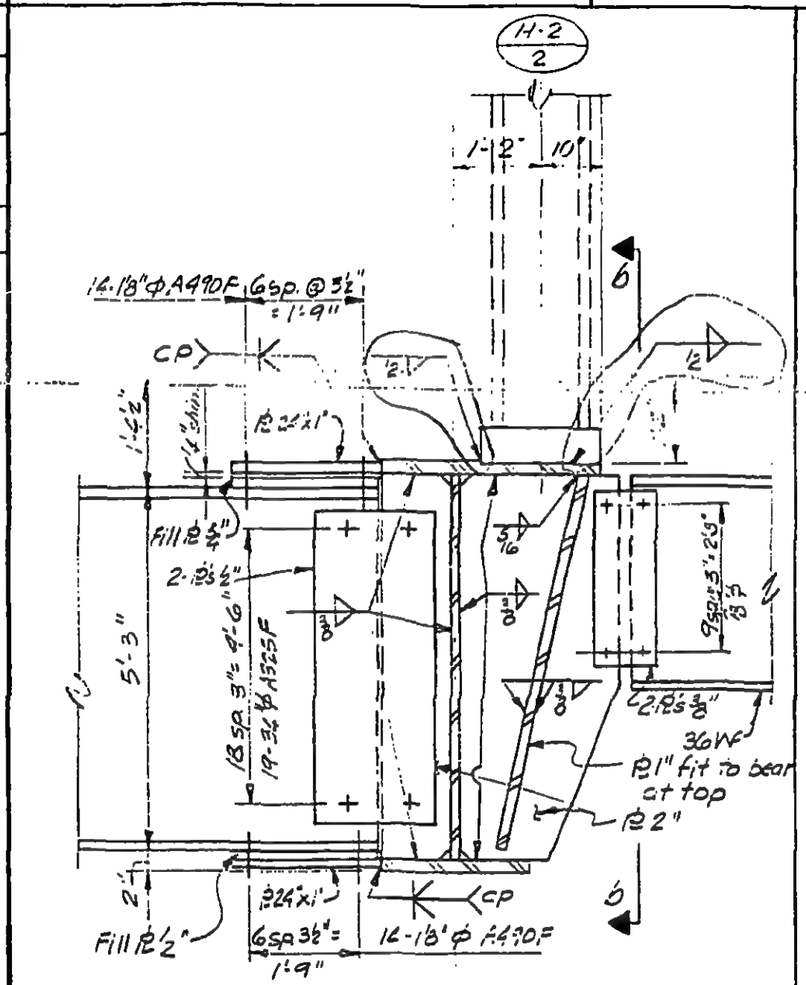

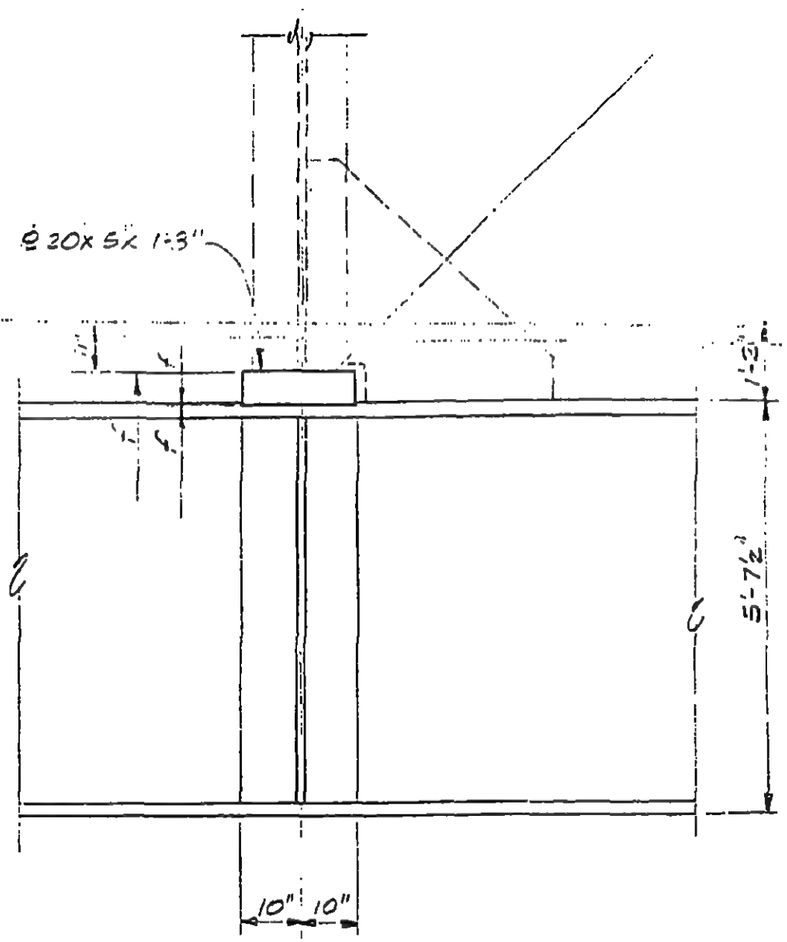

LICENSED PROFESSIONAL ENGINEER — LESLIE E. ROBERTSON — No 34380 — UNIVERSITY OF THE STATE OF NEW YORK

DESIGNED

DRAWN

REVIEWED

6

13-K 3.4-2

SKILLING, HELLE, CHRISTIANSEN, ROBERTSON — Structural & Civil Engineers

PROJECT: THE WORLD TRADE CENTER

TITLE: GIRDER DETAILS AT FUTURE COLUMNS

DATE: 11-3-72

REVISIONS

GENERAL REVISION RELEASED FOR CONSTRUCTION 11-24-72

12-11-72

2-5-73

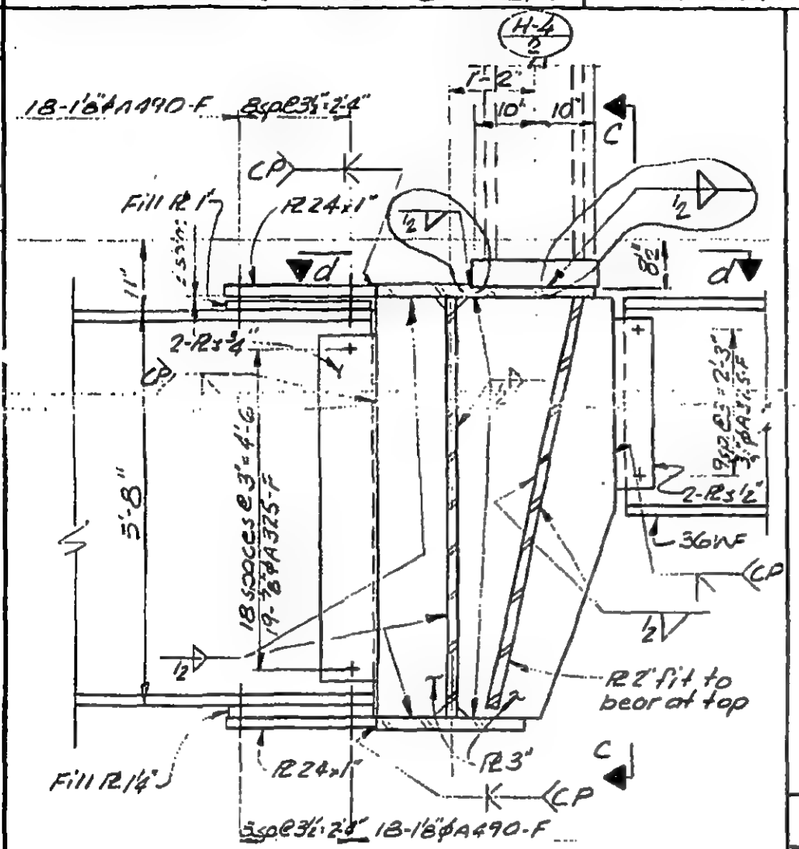

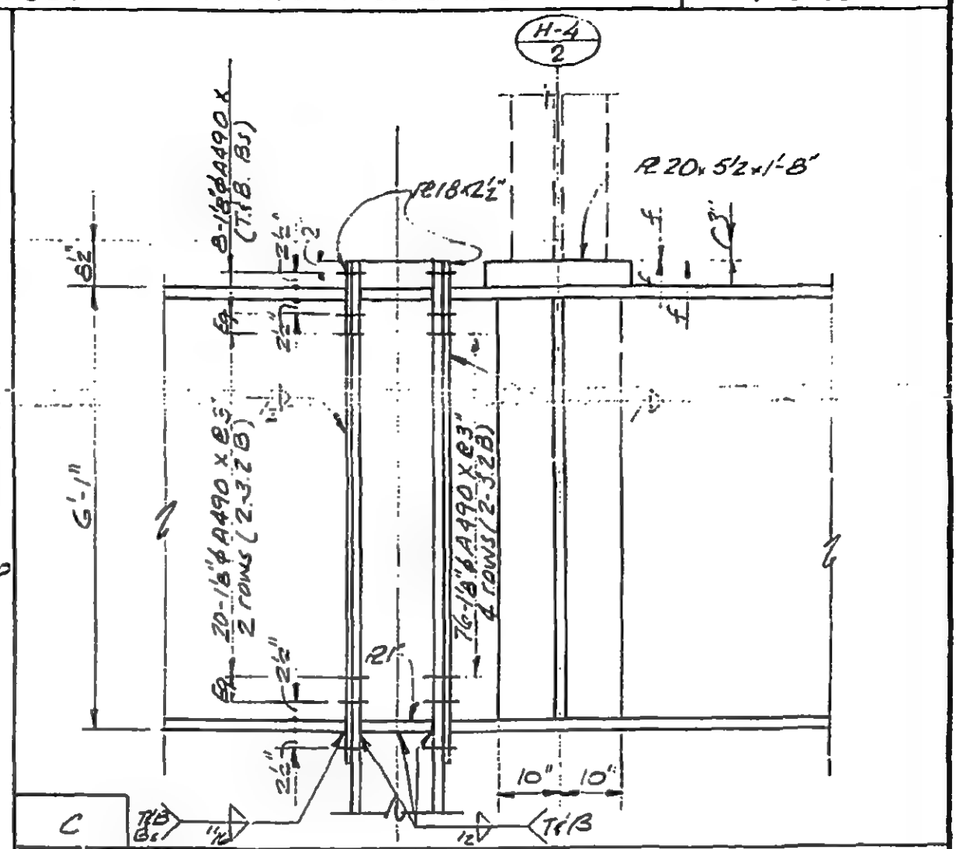

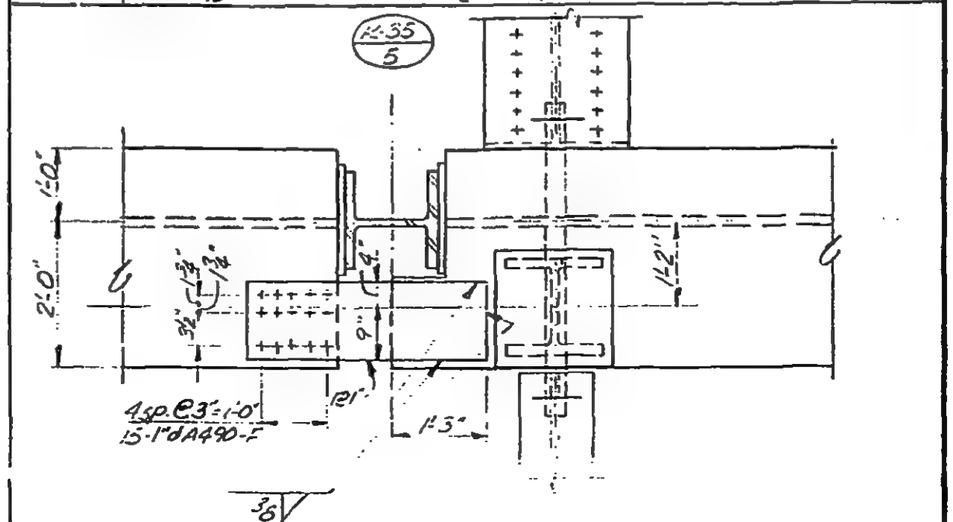

13-K34-3

LICENSED PROFESSIONAL ENGINEER — LESLIE E. ROBERTSON — No 34360 — UNIVERSITY OF THE STATE OF NEW YORK

DESIGNED

DRAWN

REVIEWED

SKILLING, HELLE, CHRISTIANSEN, ROBERTSON — Structural & Civil Engineers

PROJECT THE WORLD TRADE CENTER | TITLE GIRDER DETAILS AT FUTURE COLUMNS | DATE 11-3-72

REVISIONS

General Revision Released for Construction 11-24-72

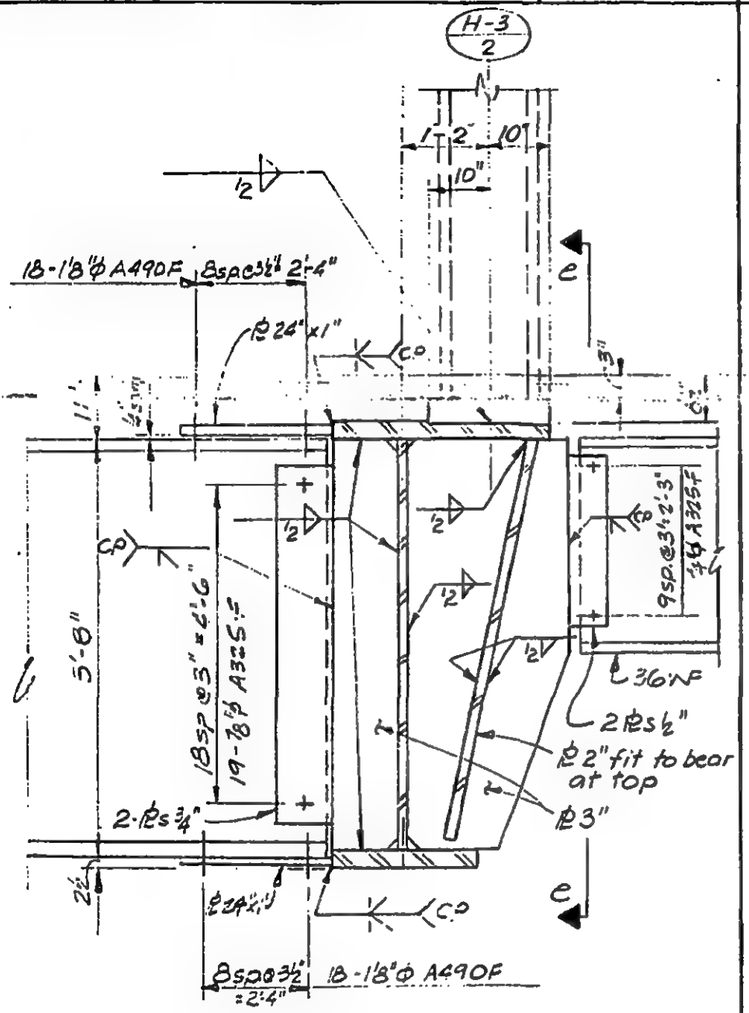

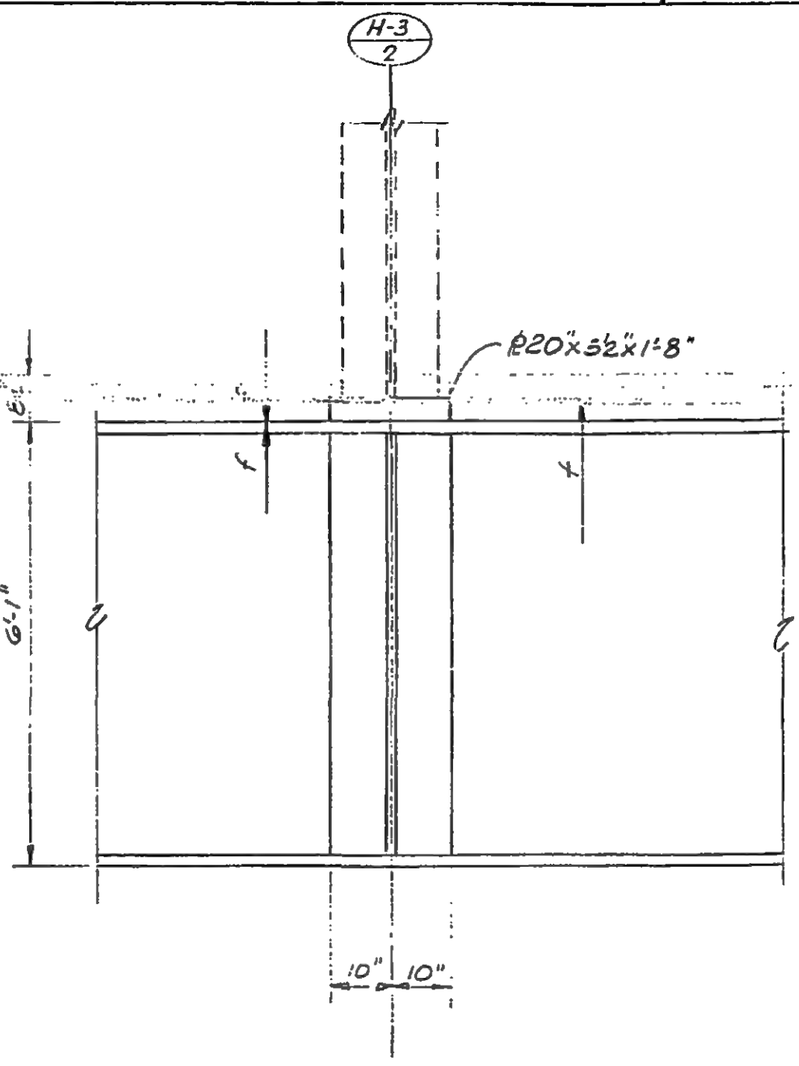

LICENSED PROFESSIONAL ENGINEER
LESLIE E. ROBERTSON
No 34360
UNIVERSITY OF THE STATE OF NEW YORK

DESIGNED

DRAWN

REVIEWED

e

13-K 3.4-4

SKILLING, HELLE, CHRISTIANSEN, ROBERTSON — Structural & Civil Engineers

PROJECT: THE WORLD TRADE CENTER | TITLE: GIRDER DETAILS AT FUTURE COLUMNS | DATE: 11-3-72

REVISIONS

RELEASED FOR CONSTRUCTION 11-24-72

12-11-72

2-5-73

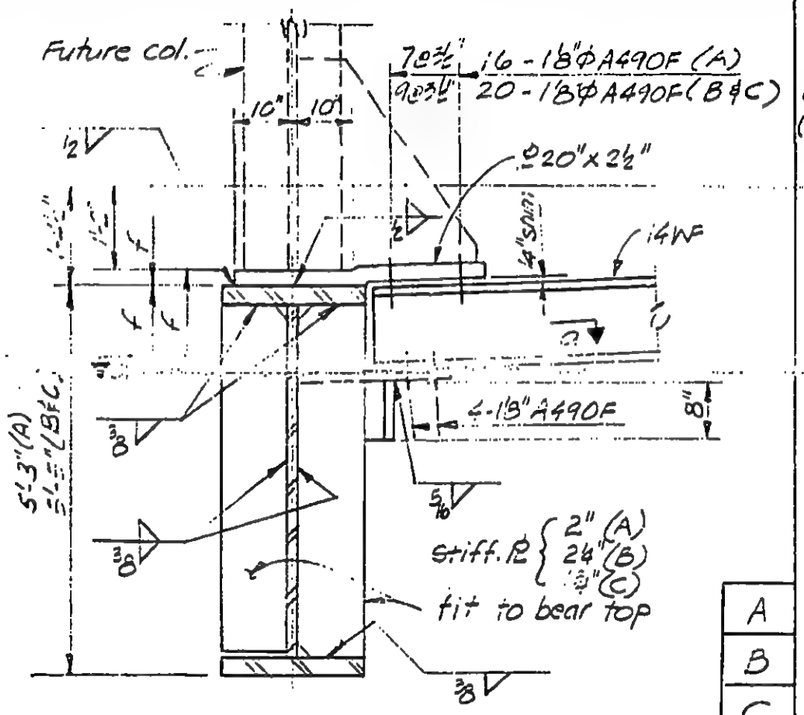

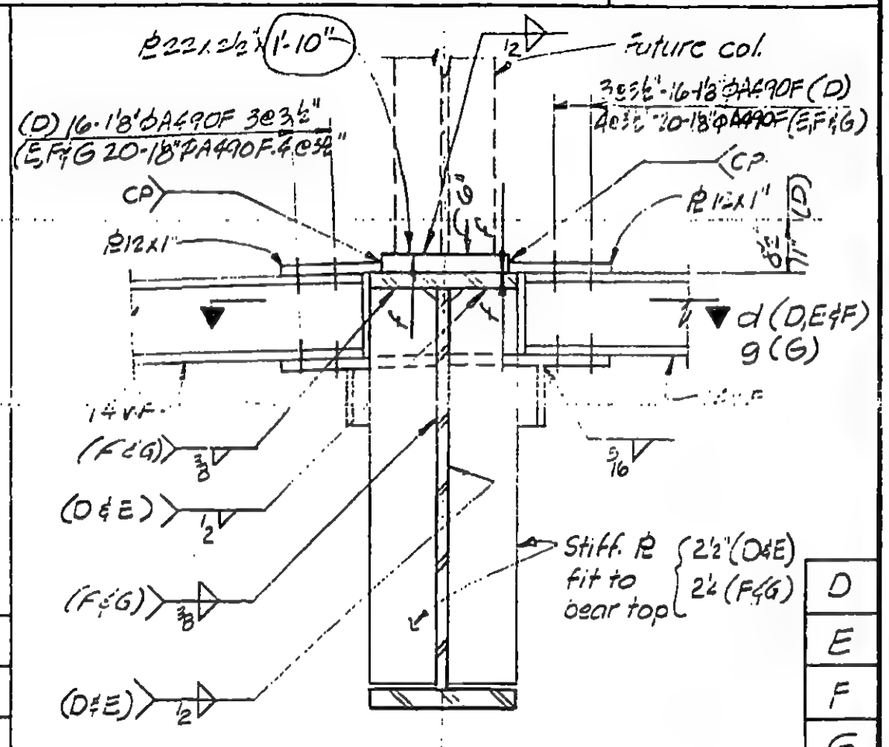

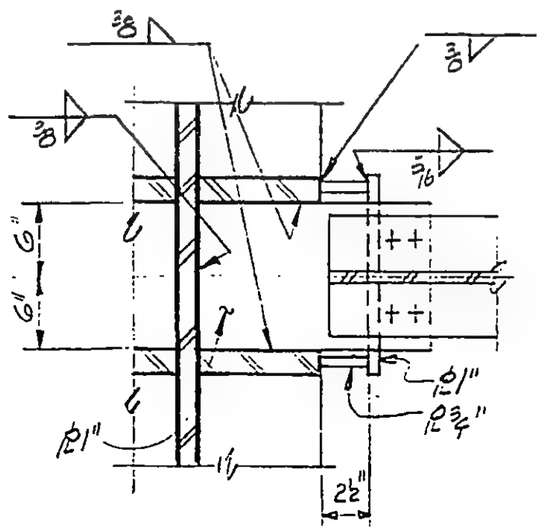

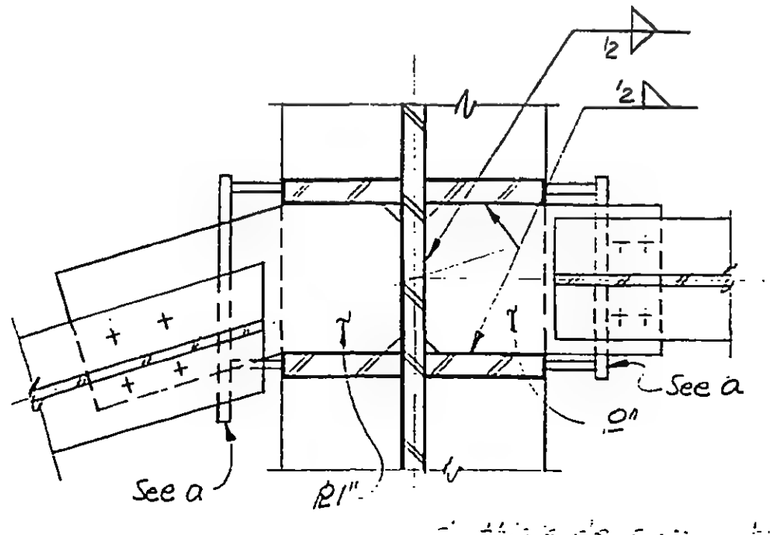

LICENSED PROFESSIONAL ENGINEER LESLIE E. ROBERTSON NO 34360 UNIVERSITY OF THE STATE OF NEW YORK

DESIGNED

SKILLING, HELLE, CHRISTIANSEN, ROBERTSON — Structural & Civil Engineers

PROJECT THE WORLD TRADE CENTER | TITLE GIRDER DETAILS AT FUTURE COLUMNS | DATE 11-24-72

REVISIONS

RELEASED FOR CONSTRUCTION 11-24-72

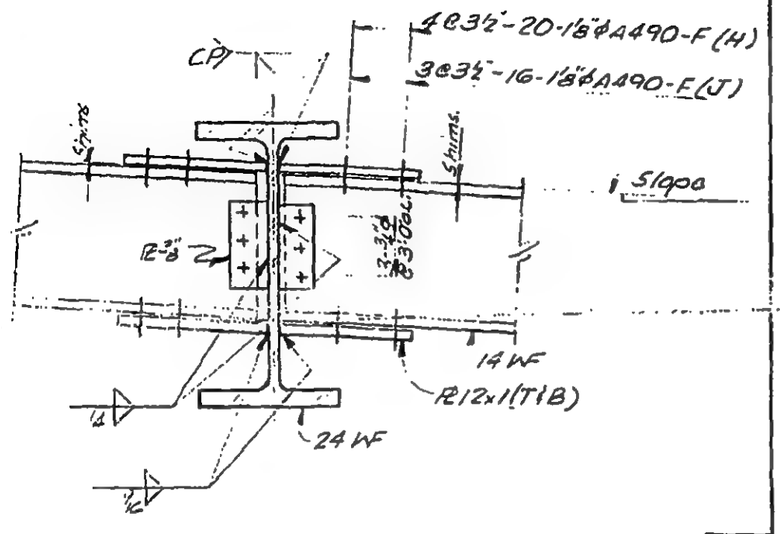

H
J

DESIGNED

DRAWN T.R

REVIEWED

13-K3.4-5.2

SKILLING, HELLE, CHRISTIANSEN, ROBERTSON — Structural & Civil Engineers

PROJECT: THE WORLD TRADE CENTER | TITLE: GIRDER DETAILS AT FUTURE COLS. | DATE: 11-3-72

REVISIONS

RELEASED FOR CONSTRUCTION 11-24-72

2-5-73

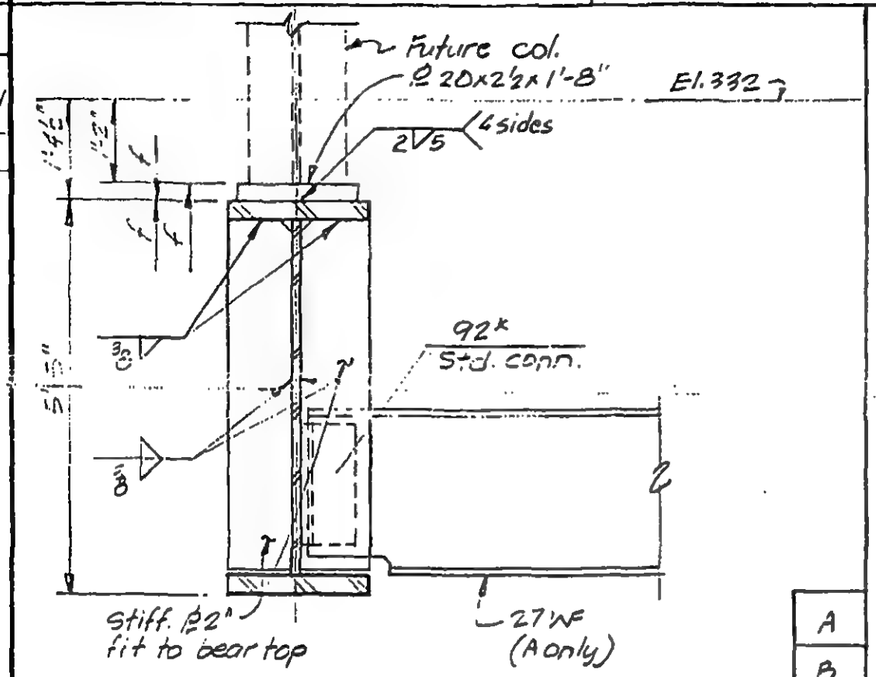

A

B

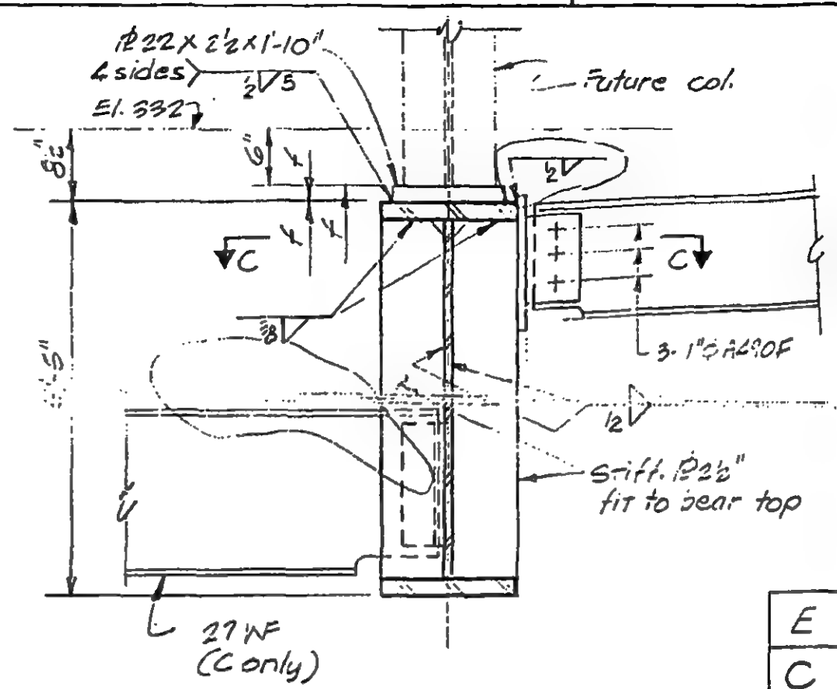

E

C

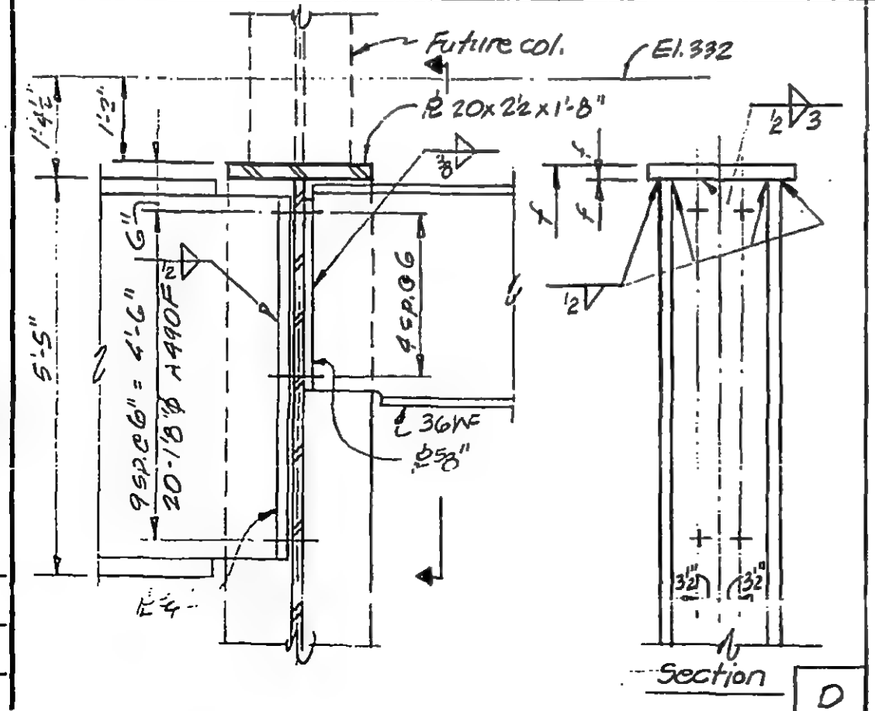

D

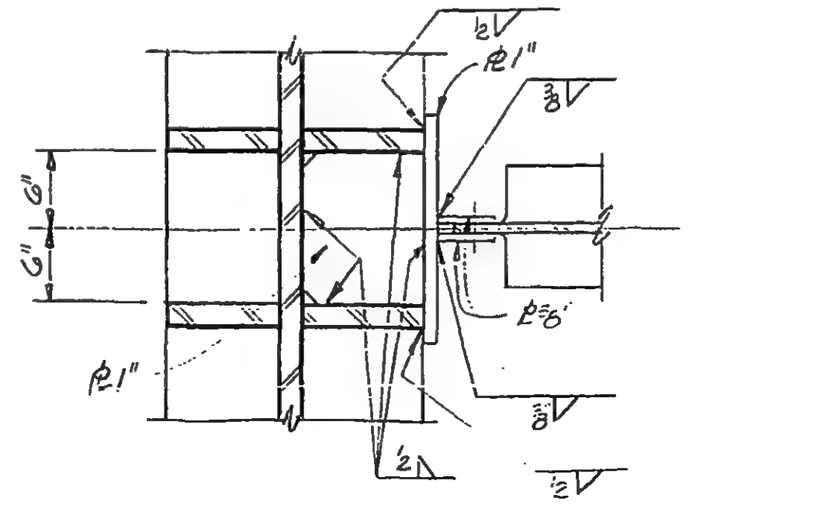

C

15-K5.9-6

LICENSED PROFESSIONAL ENGINEER
LESLIE E. ROBERTSON
No 34360
UNIVERSITY OF THE STATE OF NEW YORK

DESIGNED

DRAWN

REVIEWED

SKILLING, HELLE, CHRISTIANSEN, ROBERTSON — Structural & Civil Engineers

PROJECT: THE WORLD TRADE CENTER | TITLE: GIRDER DETAILS AT FUTURE COLS. | DATE: 11-3-72

REVISIONS

RELEASED FOR CONSTRUCTION 11-24-72

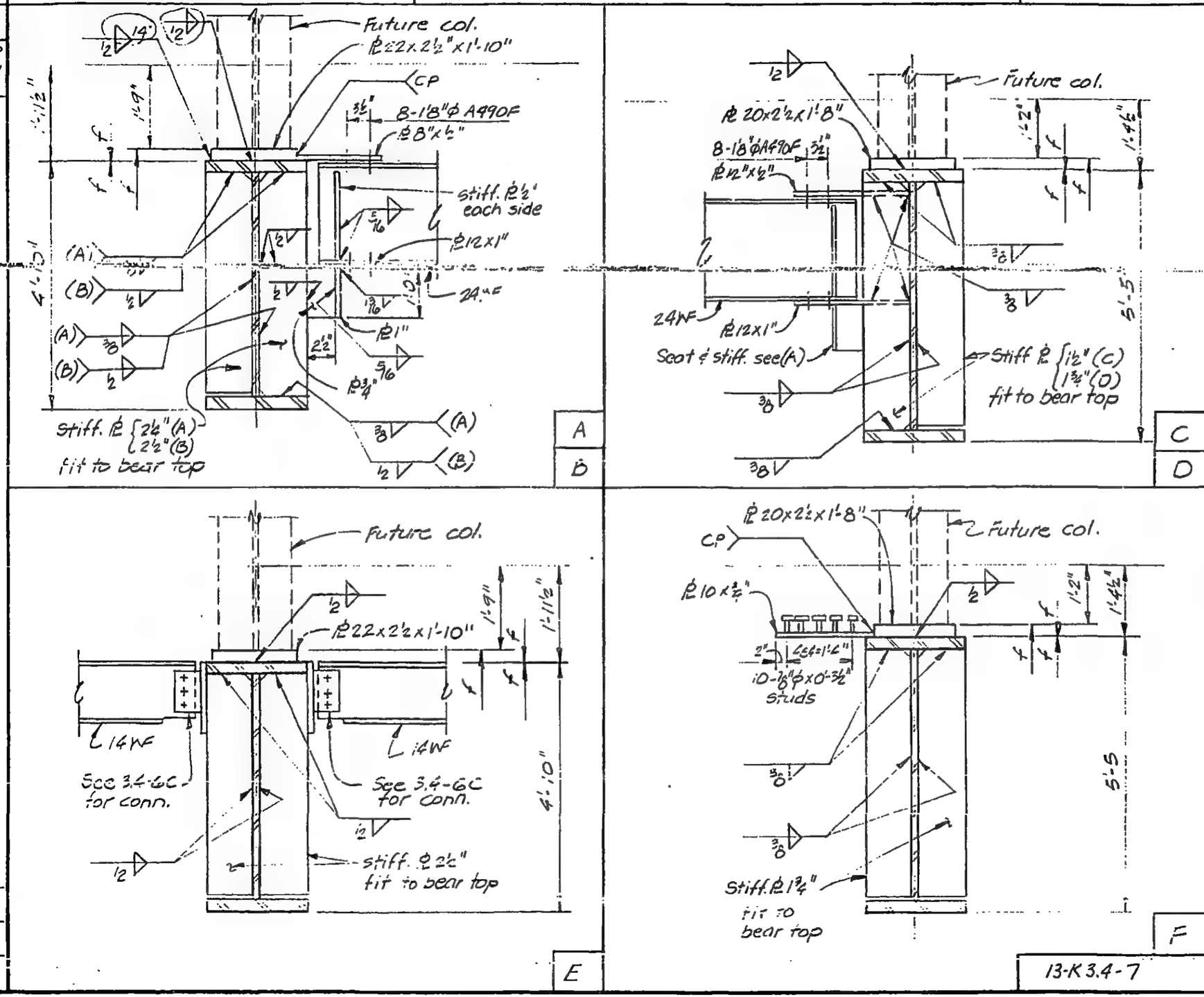

13-K 3.4-7

LICENSED PROFESSIONAL ENGINEER — LESLIE E. ROBERTSON — No 34360 — UNIVERSITY OF THE STATE OF NEW YORK

DESIGNED

DRAWN

REVIEWED

SKILLING, HELLE, CHRISTIANSEN, ROBERTSON — Structural & Civil Engineers

PROJECT: THE WORLD TRADE CENTER

TITLE: GIRDER DETAILS AT FUTURE COLS.

DATE: 11-3-72

REVISIONS

RELEASED FOR CONSTRUCTION 11-24-72

6-20-73 R

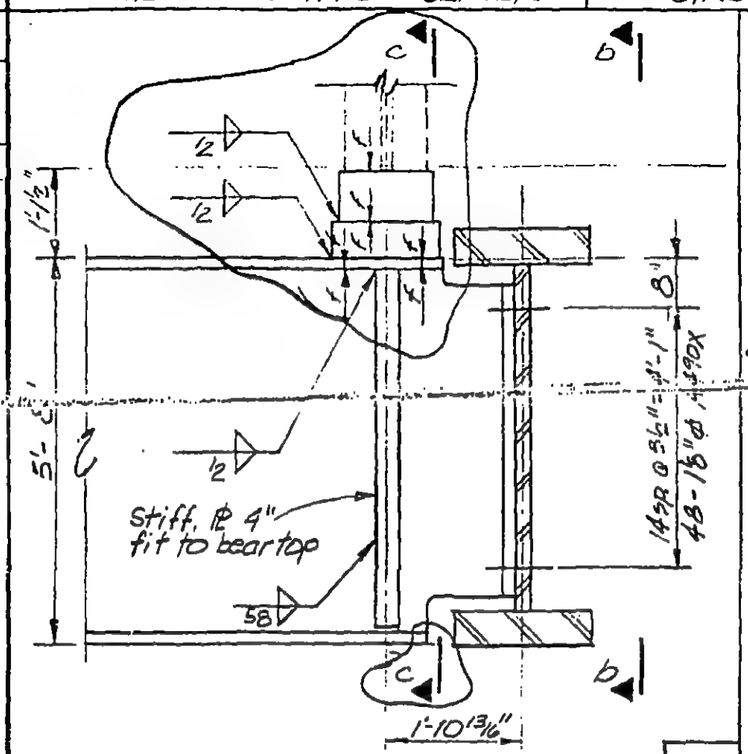

a

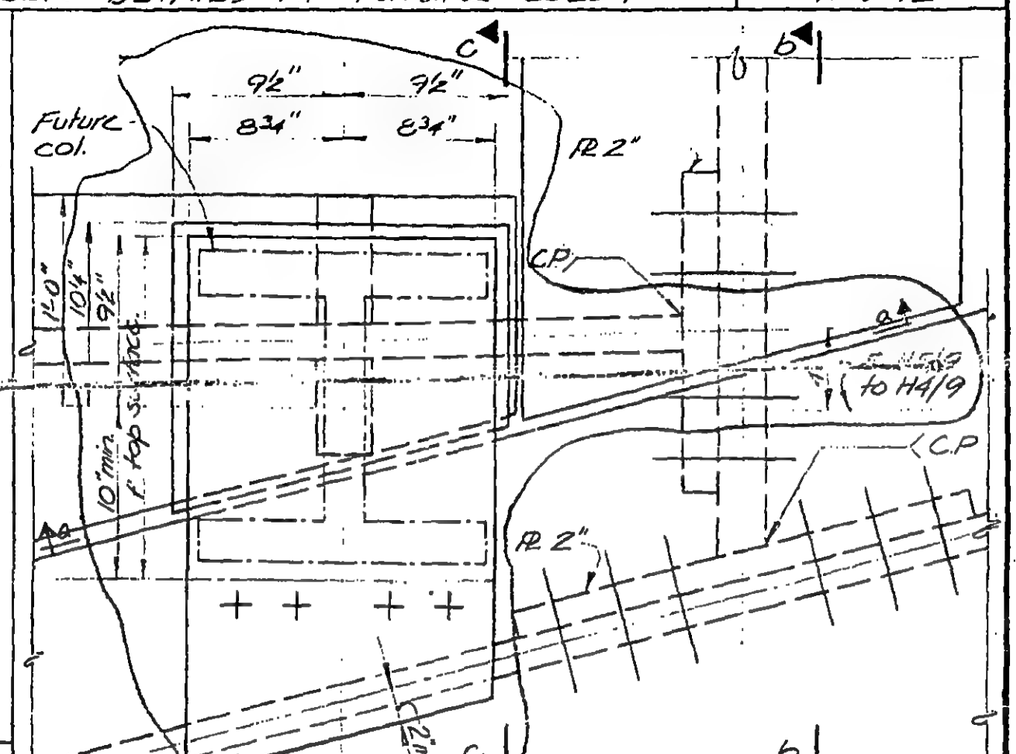

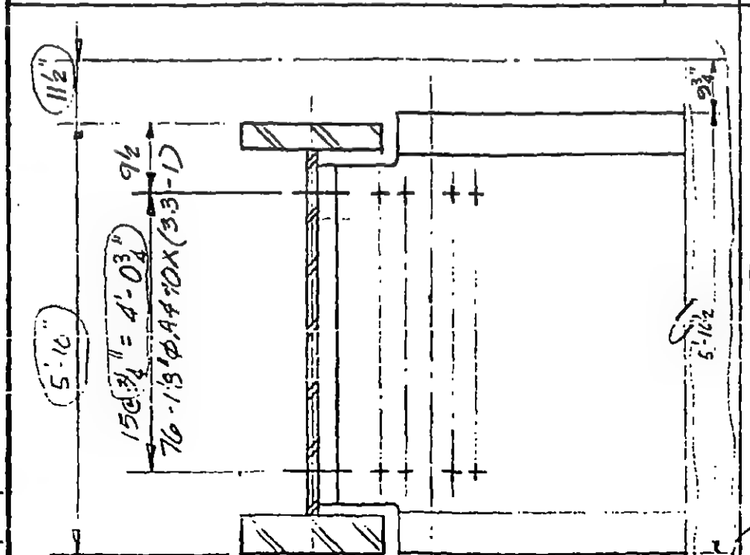

b c

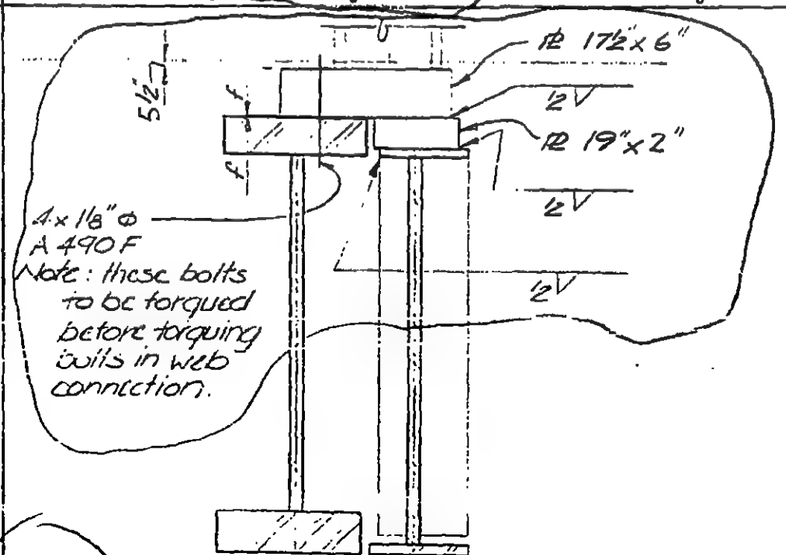

LICENSED PROFESSIONAL ENGINEER
LESLIE E. ROBERTSON
NO 34360
UNIVERSITY OF THE STATE OF NEW YORK

DESIGNED: K C

DRAWN: P.M.O

REVIEWED: W.A.B.

13-K3.4-8

SKILLING, HELLE, CHRISTIANSEN, ROBERTSON — Structural & Civil Engineers

PROJECT: THE WORLD TRADE CENTER | TITLE: GIRDER DETAILS AT FUTURE COLS. | DATE: 11-3-72

REVISIONS

RELEASED FOR CONSTRUCTION 11-24-72

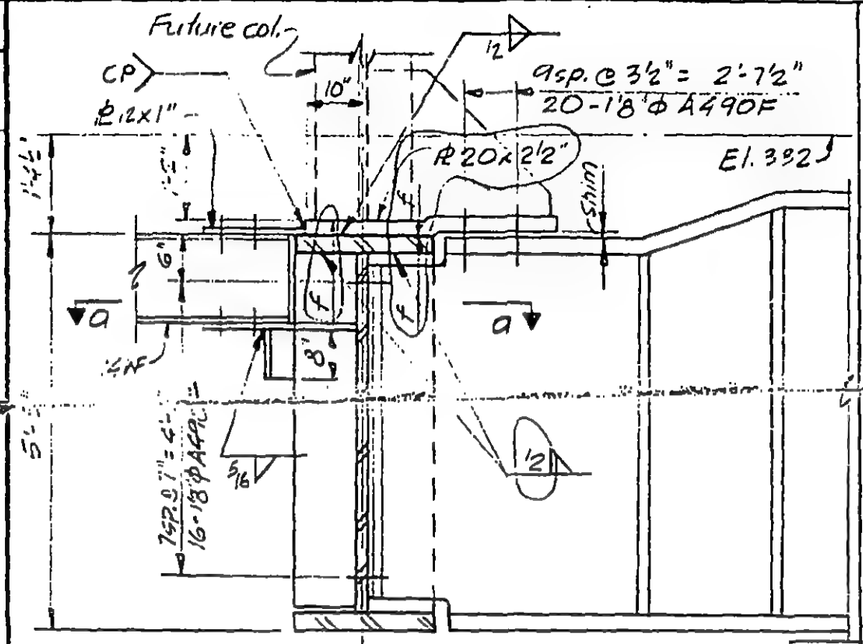

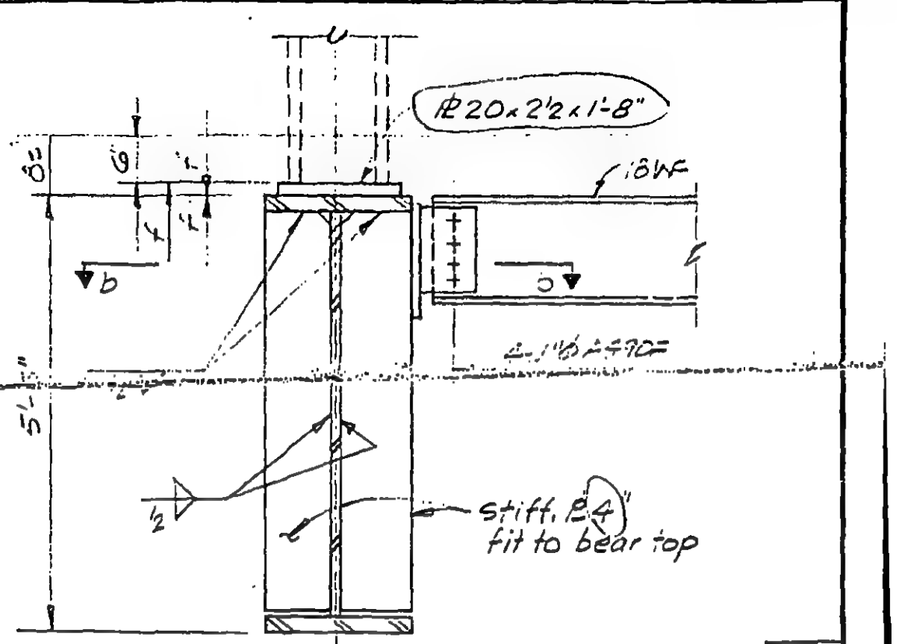

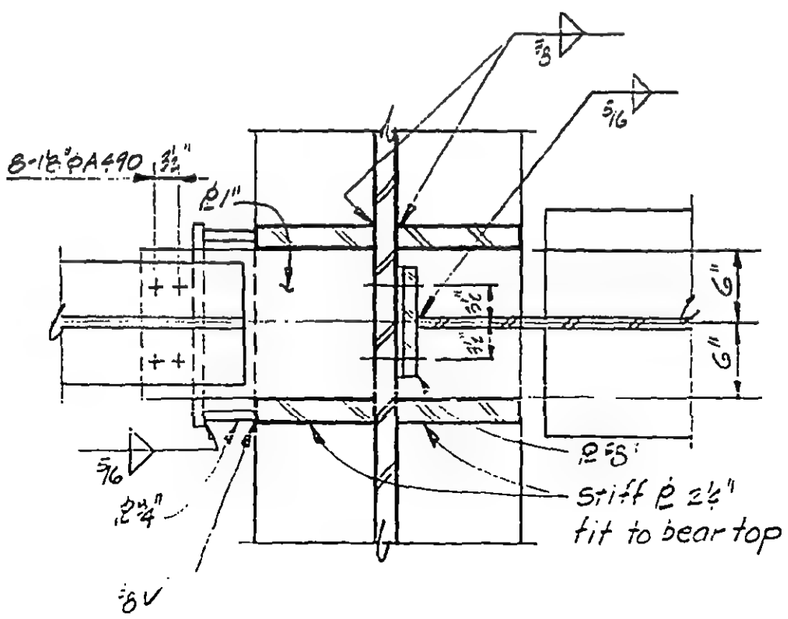

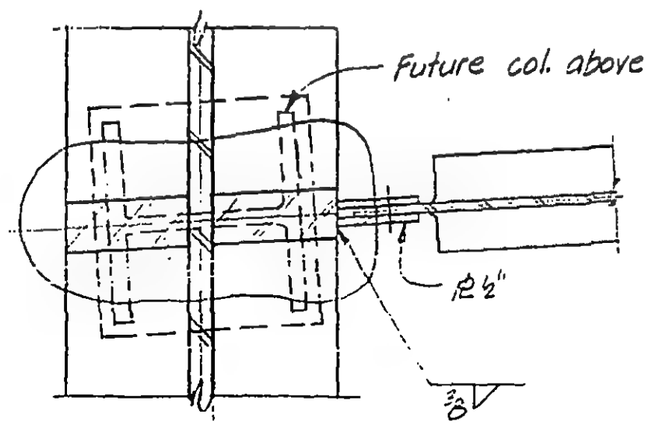

LICENSED PROFESSIONAL ENGINEER — LESLIE E. ROBERTSON — NO 34360 — UNIVERSITY OF THE STATE OF NEW YORK

DESIGNED

DRAWN

REVIEWED

3-K3.4-9

SKILLING, HELLE, CHRISTIANSEN, ROBERTSON — Structural & Civil Engineers

PROJECT THE WORLD TRADE CENTER | TITLE GIRDER DETAILS AT FUTURE COLUMNS | DATE 11-3-72

REVISIONS

RELEASED FOR CONSTRUCTION 11-24-72

6-4-73

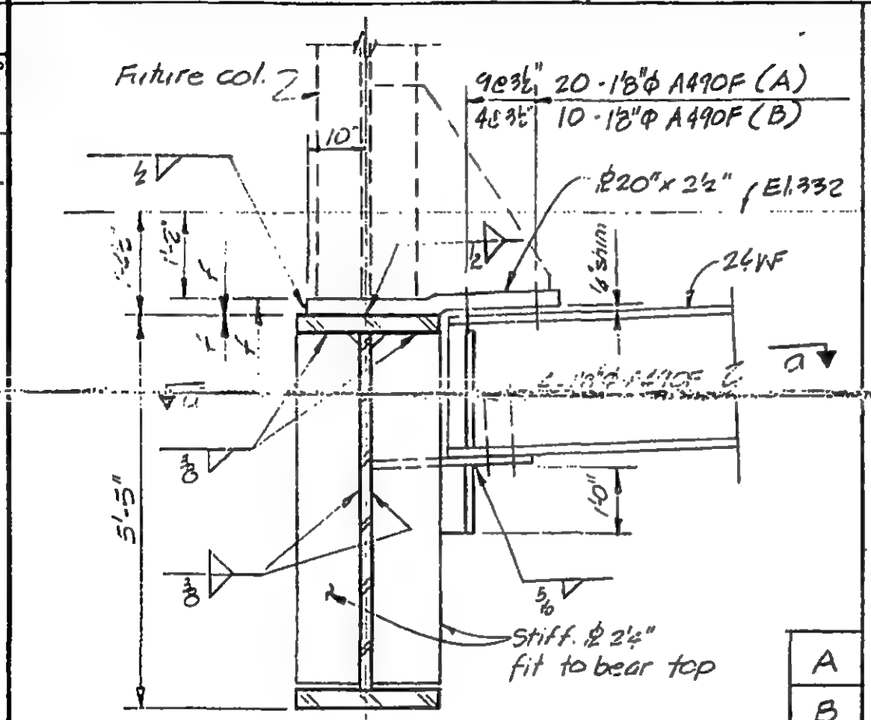

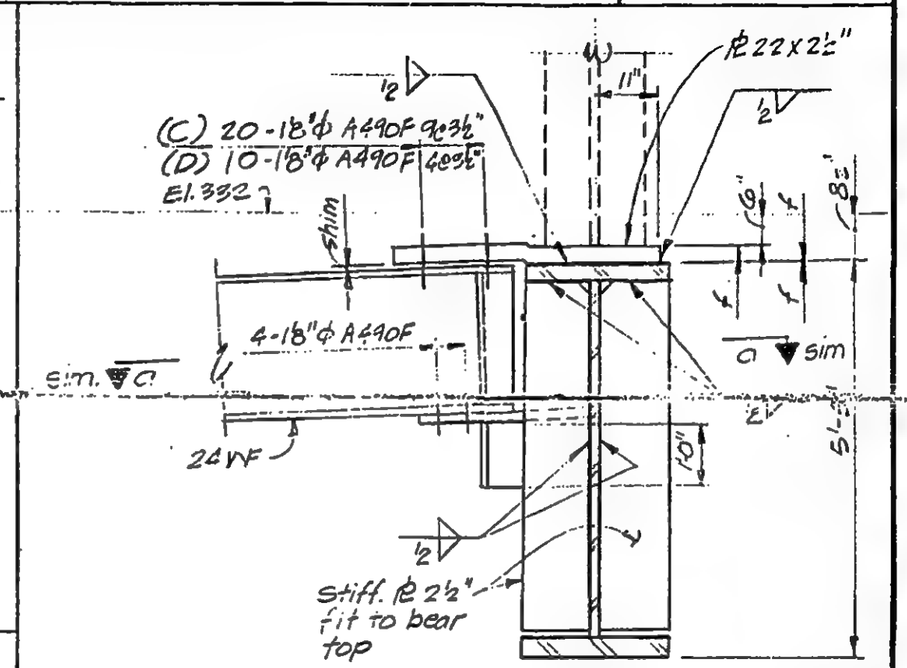

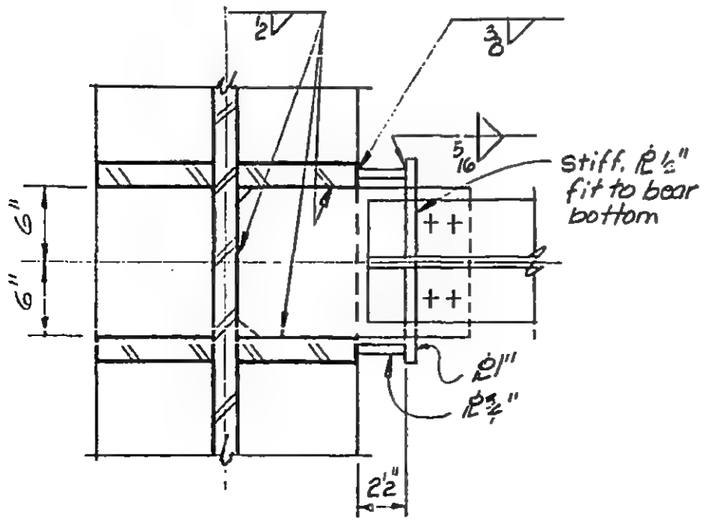

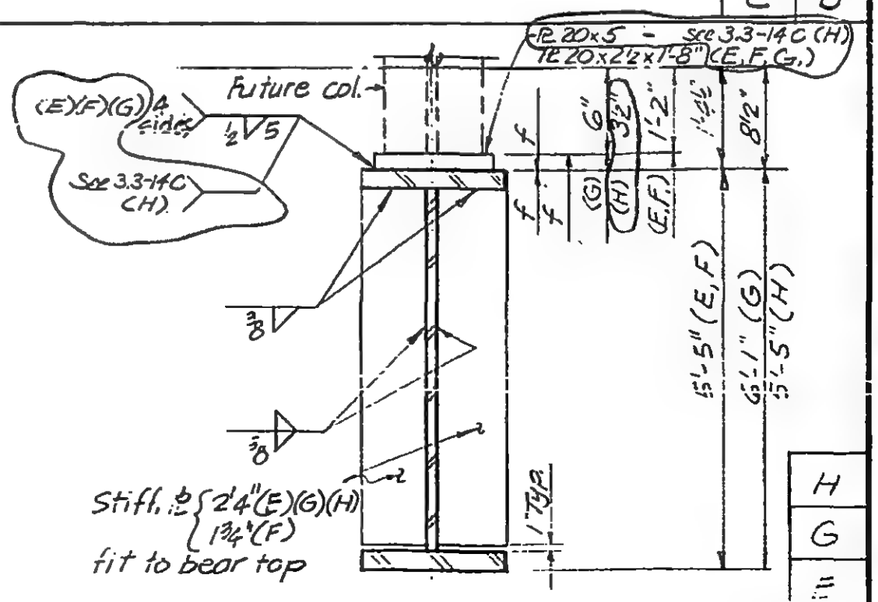

LICENSED PROFESSIONAL ENGINEER — LESLIE E. ROBERTSON — No 34360 — UNIVERSITY OF THE STATE OF NEW YORK

DESIGNED

1043-L,2

SKILLING, HELLE, CHRISTIANSEN, ROBERTSON — Structural & Civil Engineers

PROJECT: THE WORLD TRADE CENTER | TITLE: GIRDER CONN. AT FUTURE COLUMNS | DATE: 11-3-72

REVISIONS

RELEASED FOR CONSTRUCTION 11-24-72

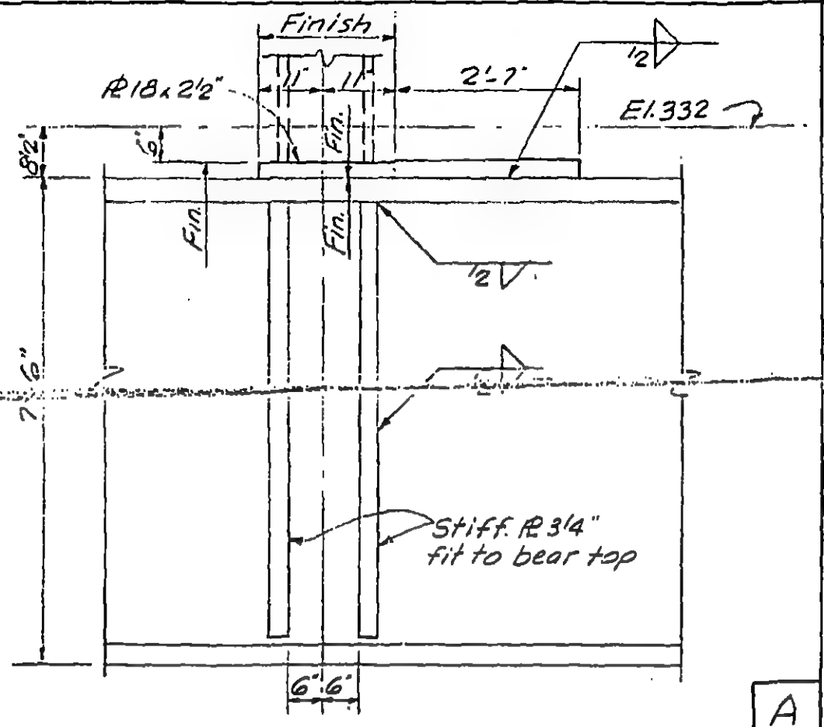

A

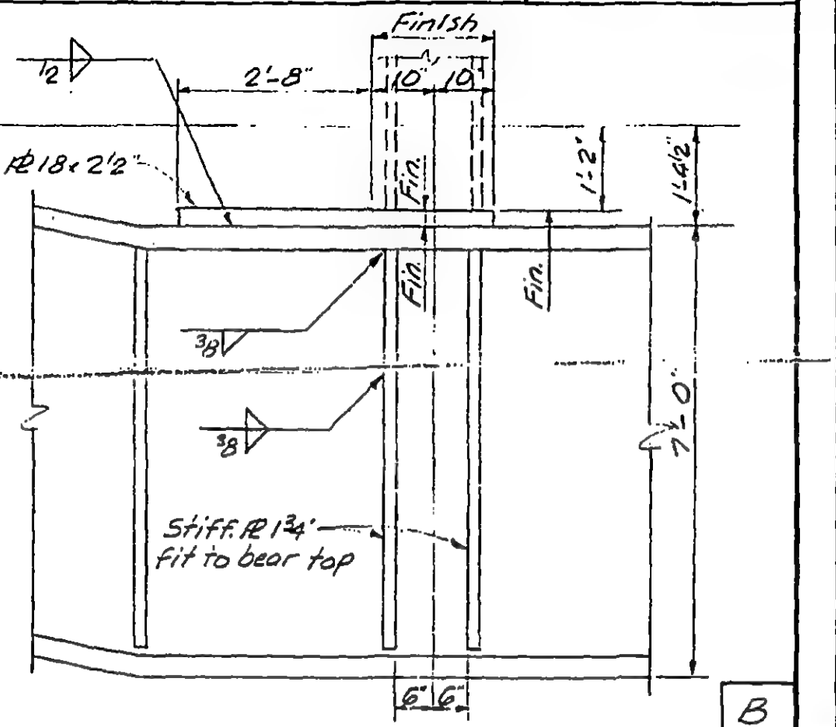

B

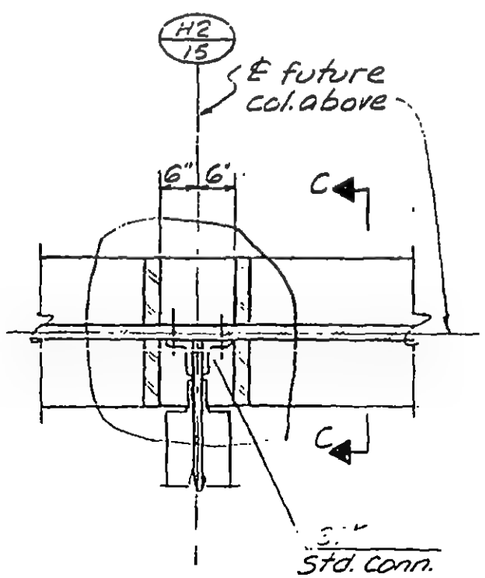

C

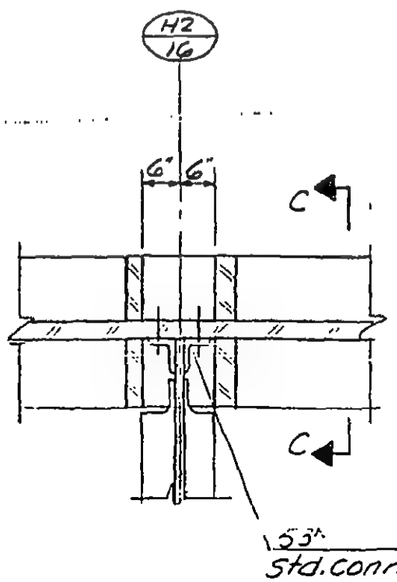

D

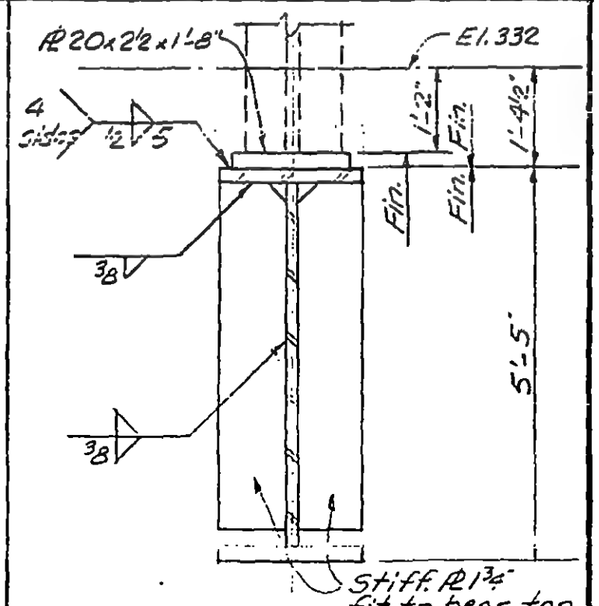

C

LICENSED PROFESSIONAL ENGINEER — LESLIE E. ROBERTSON — No 34360 — UNIVERSITY OF THE STATE OF NEW YORK

DESIGNED

DRAWN: A.L. Franqui

REVIEWED

13-K3.4-11

SKILLING, HELLE, CHRISTIANSEN, ROBERTSON — Structural & Civil Engineers

PROJECT THE WORLD TRADE CENTER | TITLE GIRDER DETAILS AT FUTURE COLUMNS | DATE 11-3-72

REVISIONS

Released for construction 11-24-72

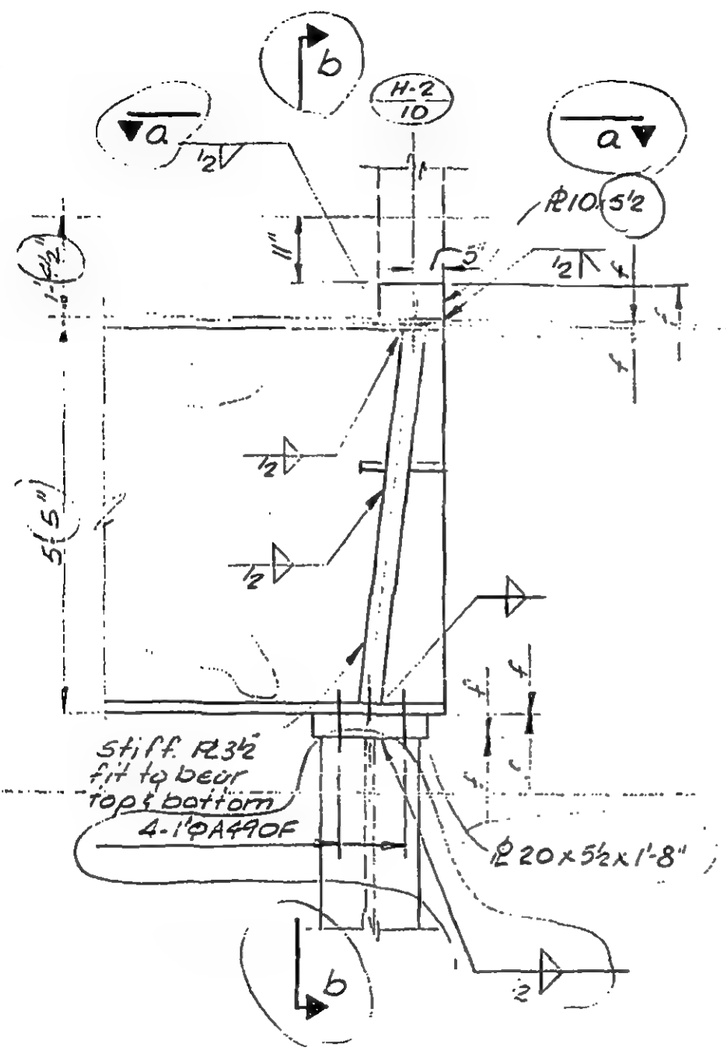

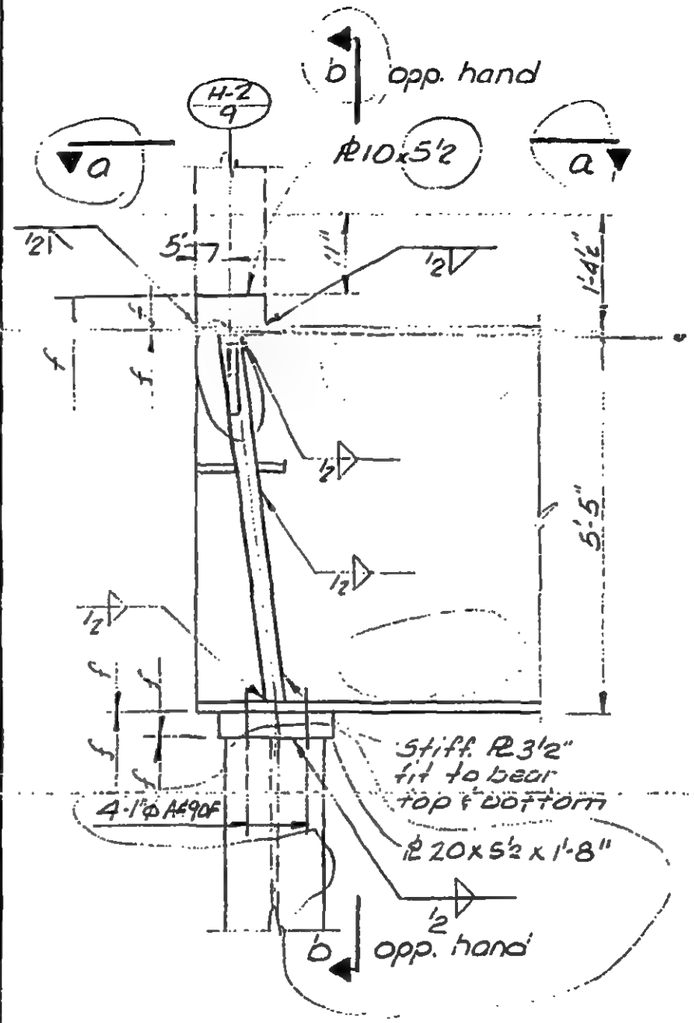

LICENSED PROFESSIONAL ENGINEER LESLIE E. ROBERTSON No 34360 UNIVERSITY OF THE STATE OF NEW YORK

DESIGNED

DRAWN TR

REVIEWED

A | B

13-K3.4-12.1

SKILLING, HELLE, CHRISTIANSEN, ROBERTSON — Structural & Civil Engineers

PROJECT: THE WORLD TRADE CENTER | TITLE: GIRDER DETAILS AT FUTURE COLUMNS | DATE: 11-24-72

REVISIONS

Released for construction 11-24-72

6-4-73

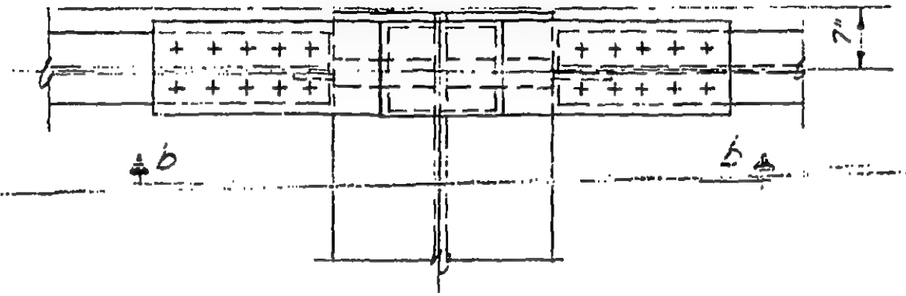

a | c

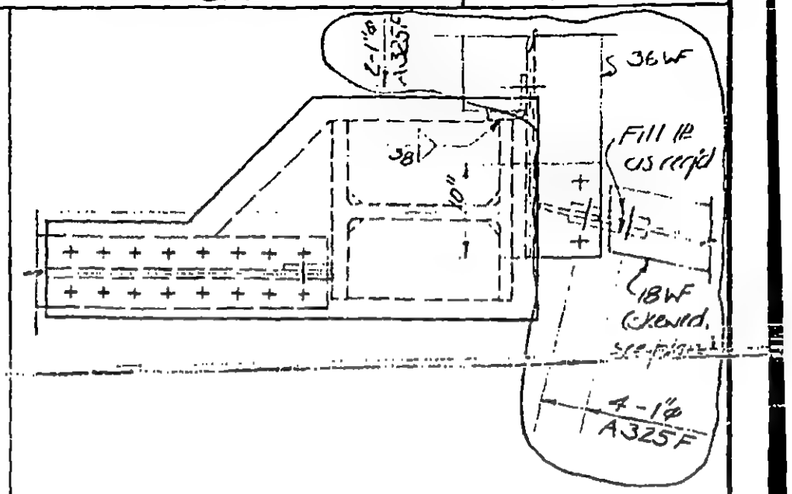

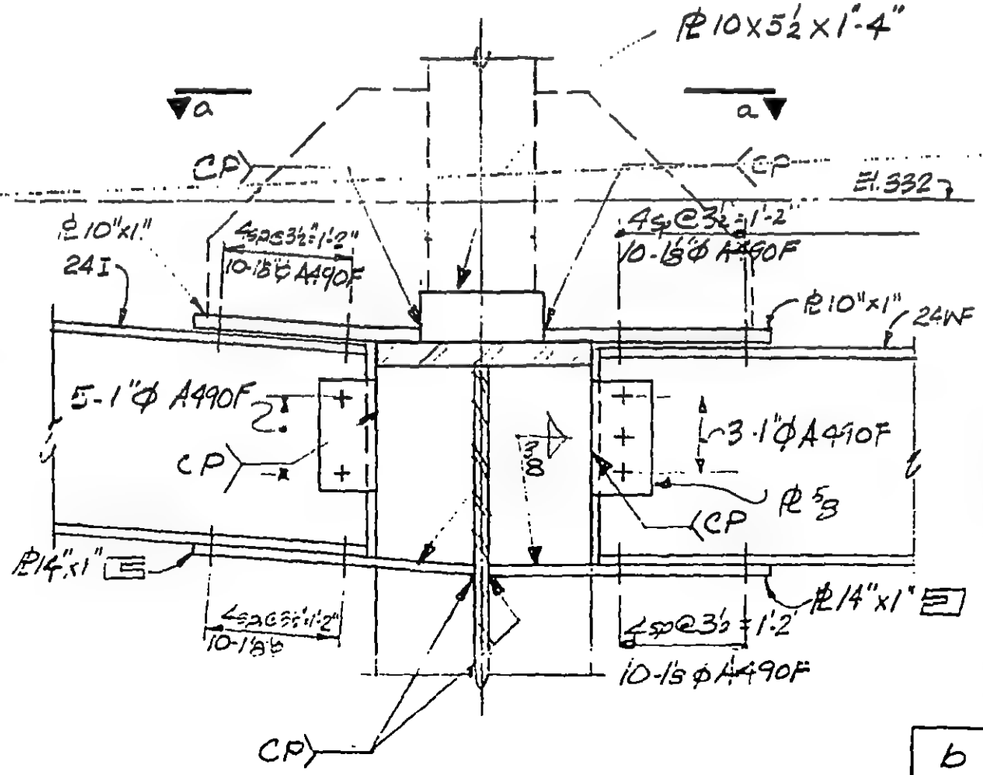

b | C

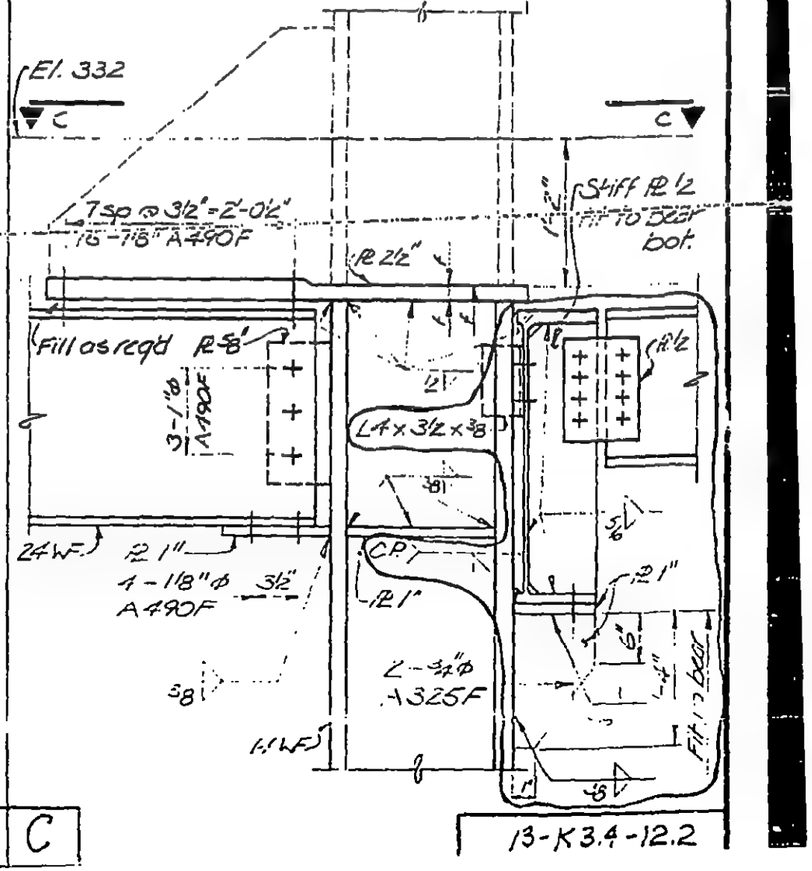

LICENSED PROFESSIONAL ENGINEER — LESLIE E. ROBERTSON — No 34360 — UNIVERSITY OF THE STATE OF NEW YORK

DESIGNED

DRAWN

REVIEWED

SKILLING, HELLE, CHRISTIANSEN, ROBERTSON — Structural & Civil Engineers

PROJECT: THE WORLD TRADE CENTER | TITLE: BEAM CONNECTIONS . AT GIRDER | DATE: 11-3-72

REVISIONS

RELEASE FOR CONSTRUCTION 11-20-72

2- 5-73

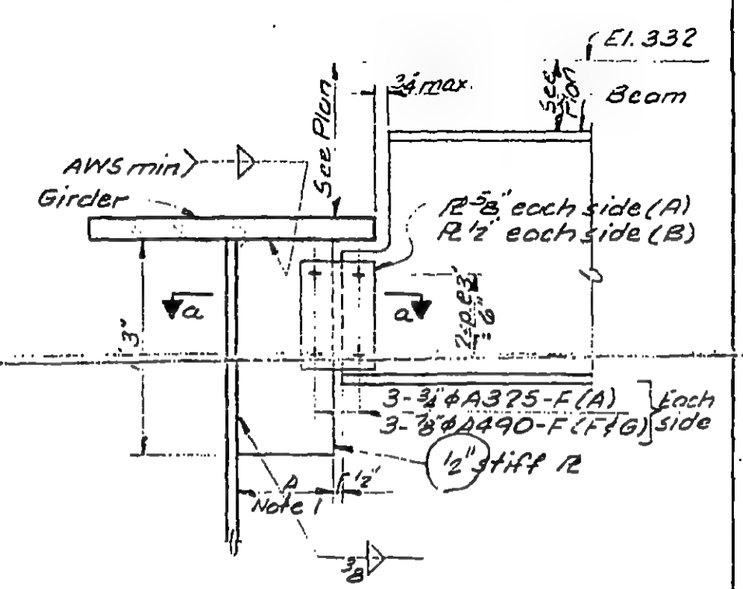

Note 1
Dim A = ⅛ or ½ of girder flange width, which ever is smaller.

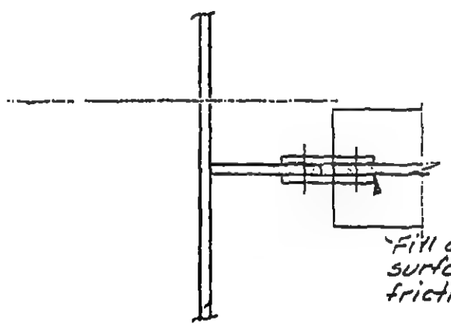

Section a-a

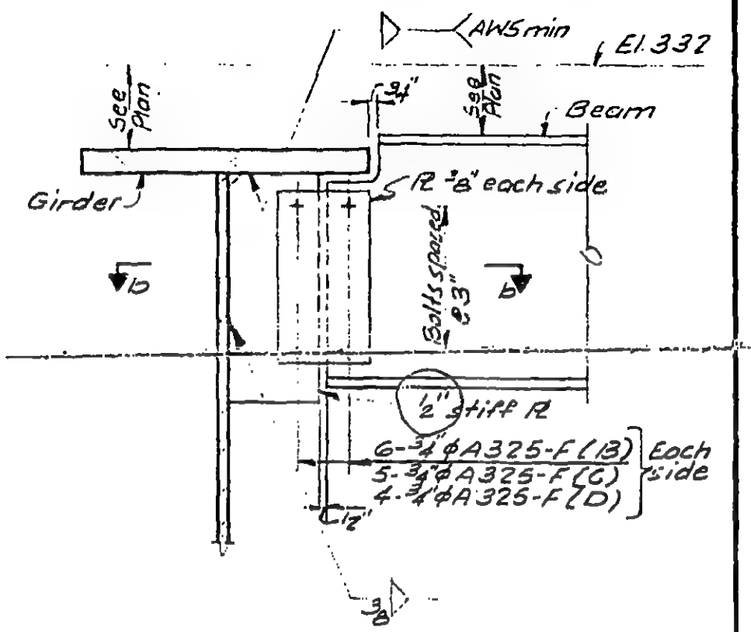

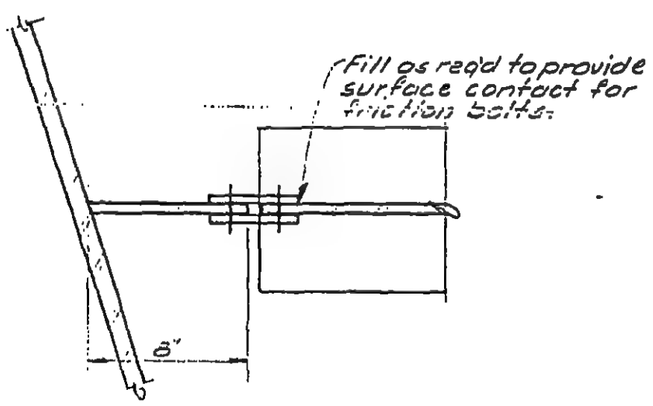

Section b-b

A	B
F	C
G	D

LICENSED PROFESSIONAL ENGINEER — LESLIE E. ROBERTSON — No 34360 — UNIVERSITY OF THE STATE OF NEW YORK

DESIGNED

DRAWN J.A. Ellis

REVIEWED

13-K3.5-1

SKILLING, HELLE, CHRISTIANSEN, ROBERTSON — Structural & Civil Engineers

PROJECT THE WORLD TRADE CENTER | TITLE BEAM CONNECTIONS AT GIRDERS | DATE 11-3-72

REVISIONS

RELEASE FOR CONSTRUCTION 11-20-72

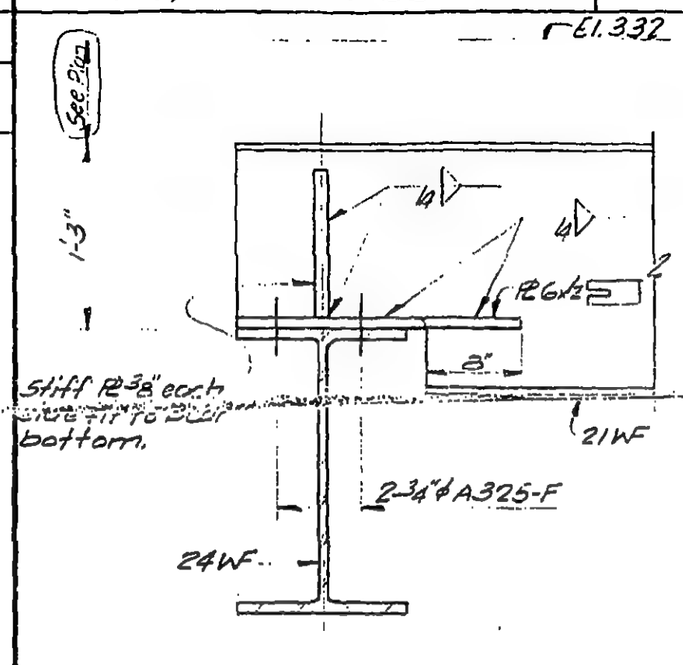

A

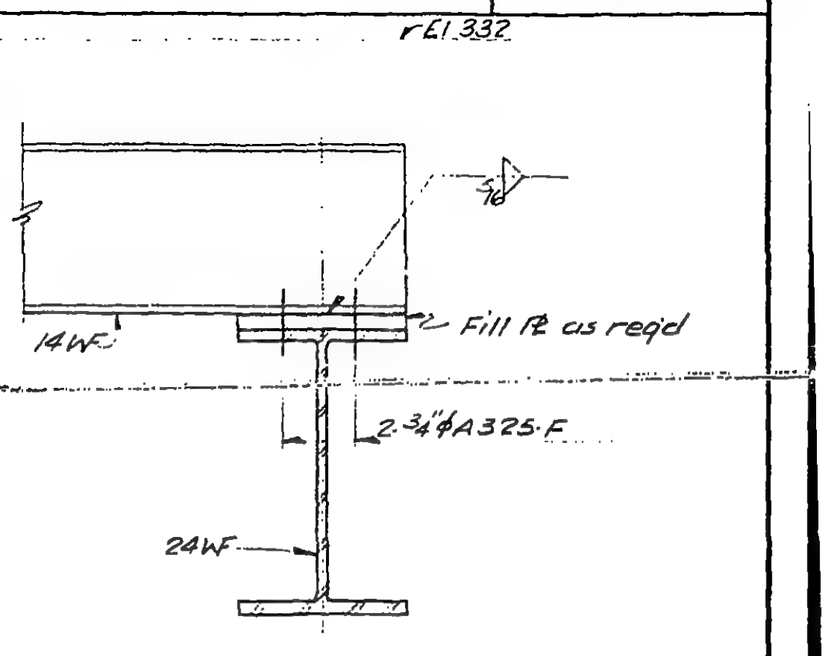

B

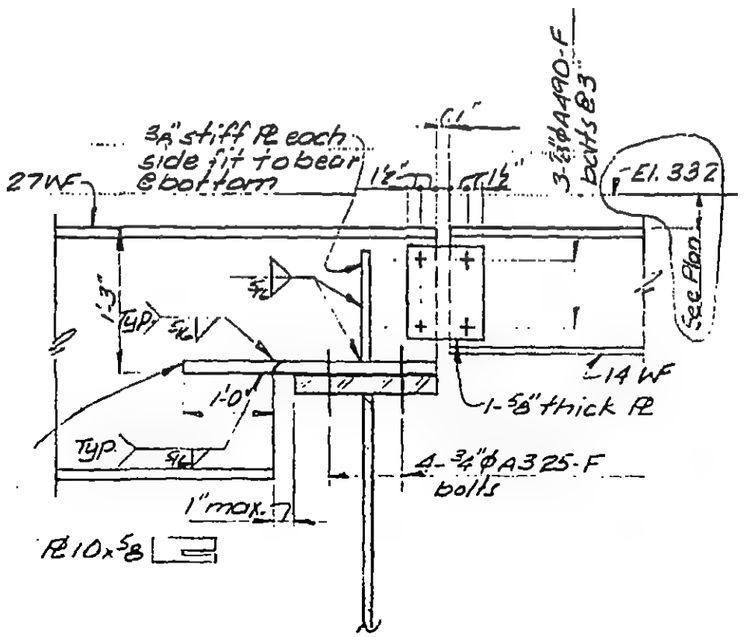

C

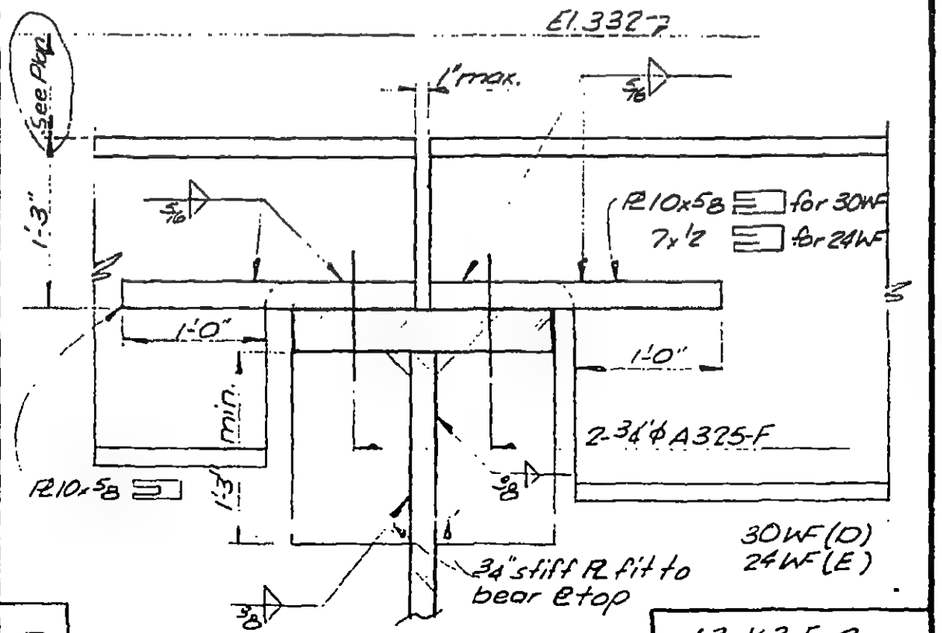

D

13-K3.5-2

LICENSED PROFESSIONAL ENGINEER — LESLIE E. ROBERTSON — No 34360 — UNIVERSITY OF THE STATE OF NEW YORK

DESIGNED

DRAWN TR

REVIEWED

SKILLING, HELLE, CHRISTIANSEN, ROBERTSON — Structural & Civil Engineers

PROJECT: THE WORLD TRADE CENTER | TITLE: BALLROOM GIRDER - ELEVATIONS | DATE: 11-3-72

REVISIONS

RELEASE FOR CONSTRUCTION 11-20-72

12-11-72

6-4-73

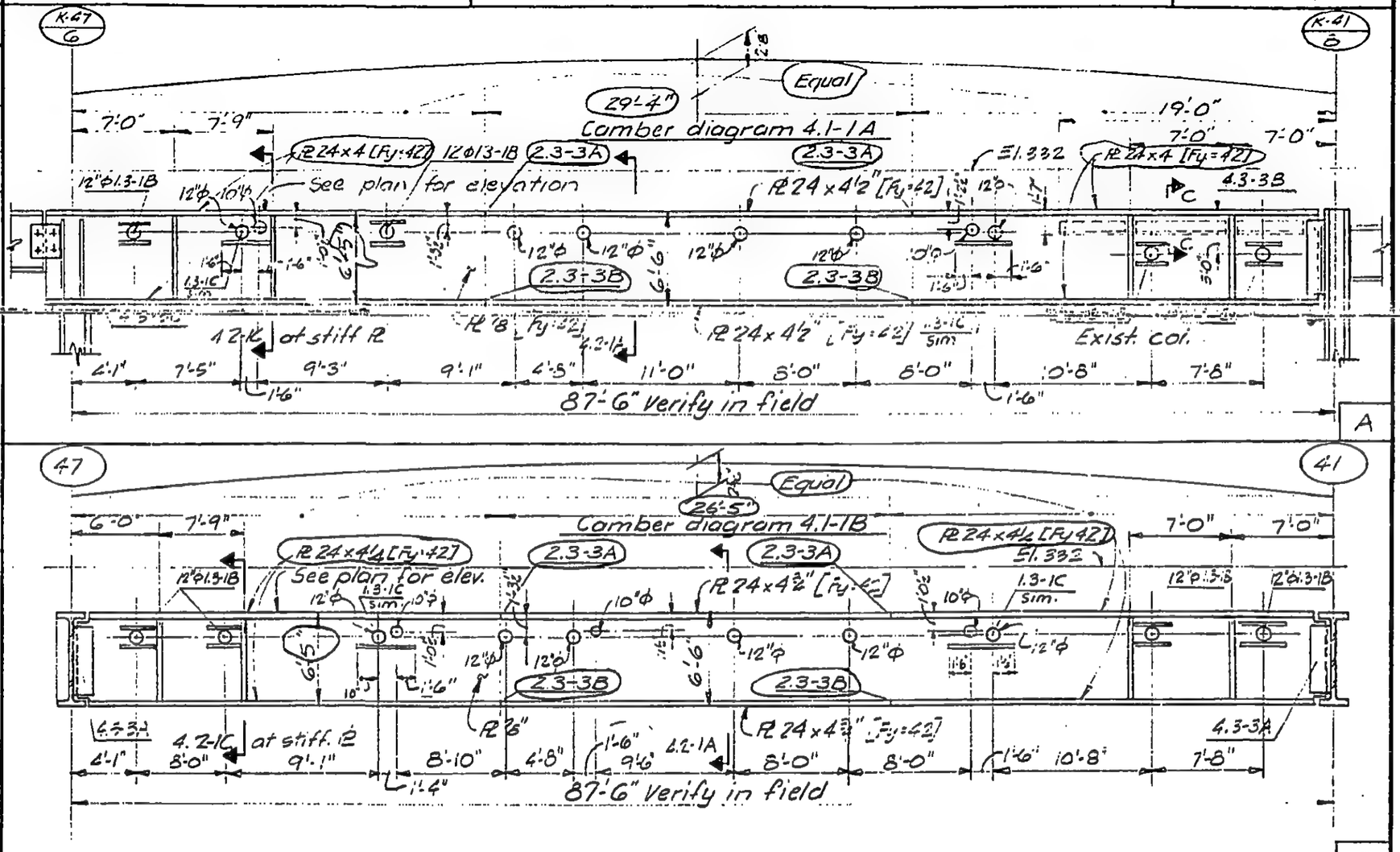

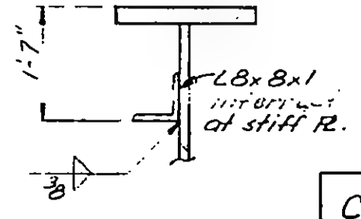

C

13-K 4.1-1

LICENSED PROFESSIONAL ENGINEER
LESLIE E. ROBERTSON
No. 34360
UNIVERSITY OF THE STATE OF NEW YORK

DESIGNED WAB

DRAWN TR

REVIEWED

SKILLING, HELLE, CHRISTIANSEN, ROBERTSON — Structural & Civil Engineers

PROJECT: THE WORLD TRADE CENTER | TITLE: BALLROOM GIRDER - ELEVATIONS | DATE: 11-3-72

REVISIONS

RELEASE FOR CONSTRUCTION 11-20-72

6-4-73

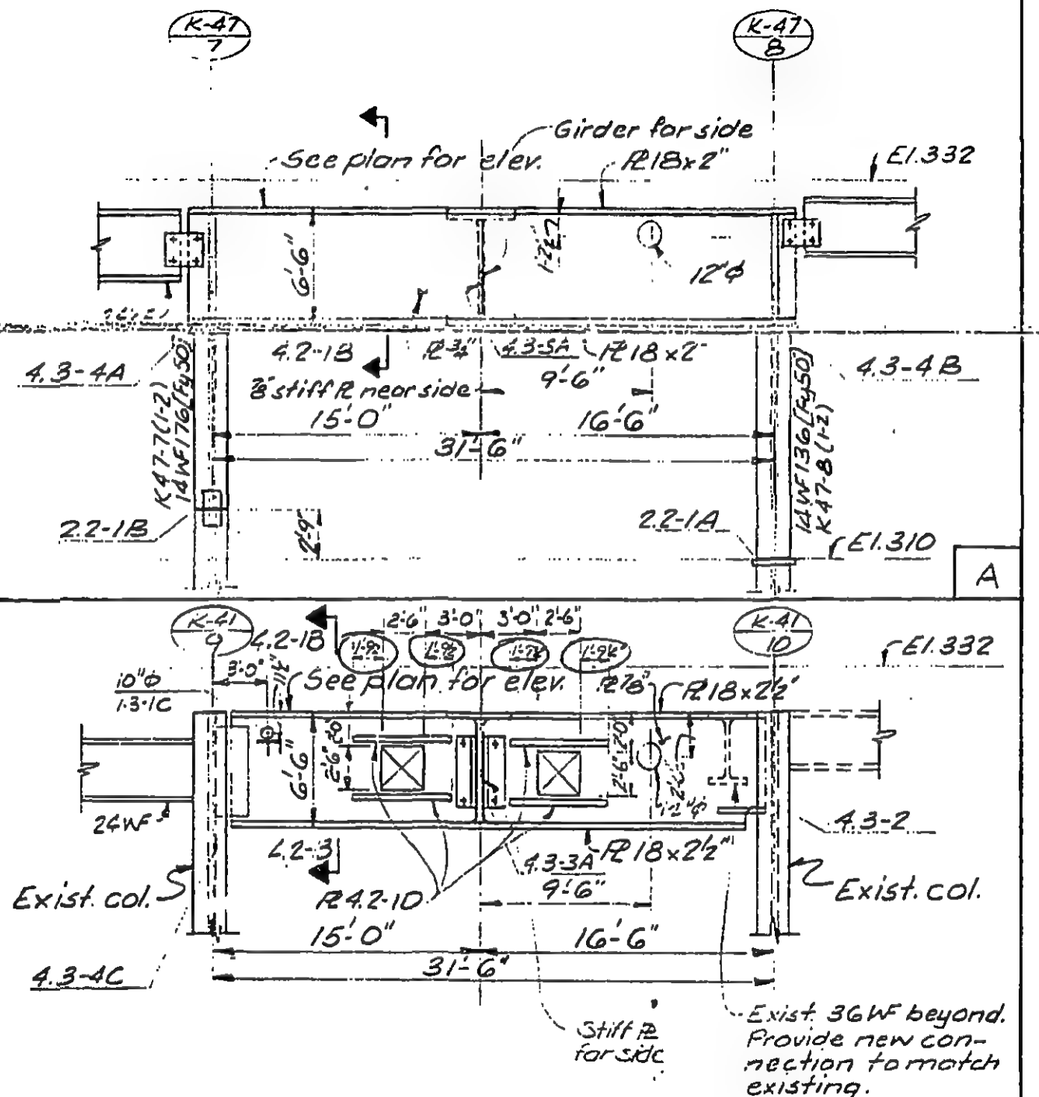

LICENSED PROFESSIONAL ENGINEER — LESLIE E. ROBERTSON — No 34360 — UNIVERSITY OF THE STATE OF NEW YORK

DESIGNED NAS

DRAWN TR

REVIEWED

13-K-4.1-2

SKILLING, HELLE, CHRISTIANSEN, ROBERTSON — Structural & Civil Engineers

PROJECT THE WORLD TRADE CENTER | TITLE BALLROOM GIRDERS - TYPICAL DETAILS | DATE 11-3-72

REVISIONS

RELEASE FOR CONSTRUCTION 11-20-72

6-4-73

A

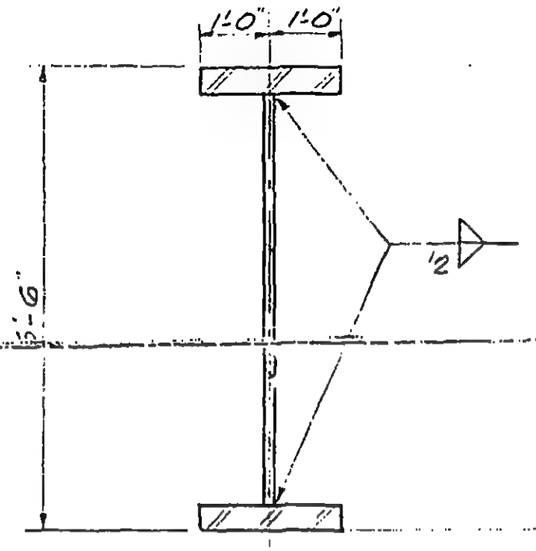

B

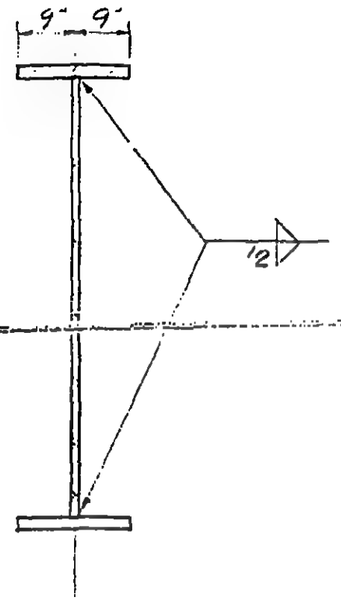

C

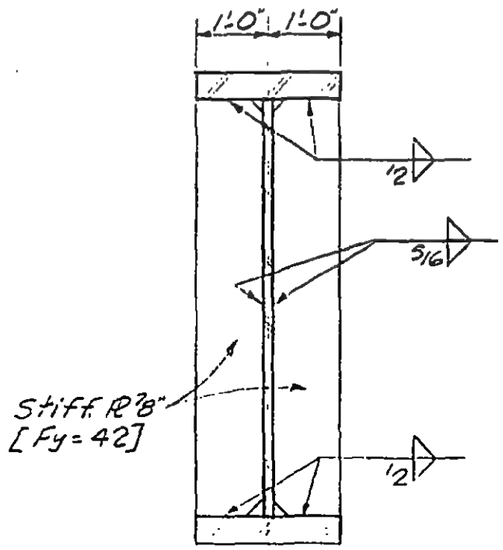

D

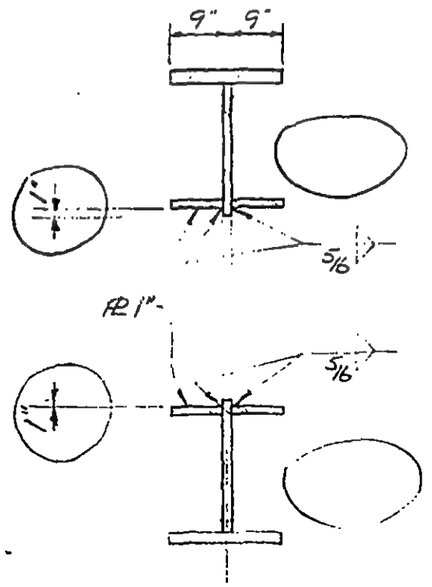

LICENSED PROFESSIONAL ENGINEER
LESLIE E. ROBERTSON
NO 34360
UNIVERSITY OF THE STATE OF NEW YORK

DESIGNED

DRAWN
A.L. Franqui

REVIEWED

13-K4.2-1

SKILLING, HELLE, CHRISTIANSEN, ROBERTSON — Structural & Civil Engineers

PROJECT: THE WORLD TRADE CENTER | TITLE: BALLROOM GIRDER - SLIDE CONNECTION | DATE: 11-3-72

REVISIONS

General Revision Released for construction 11-24-72

3-21-73

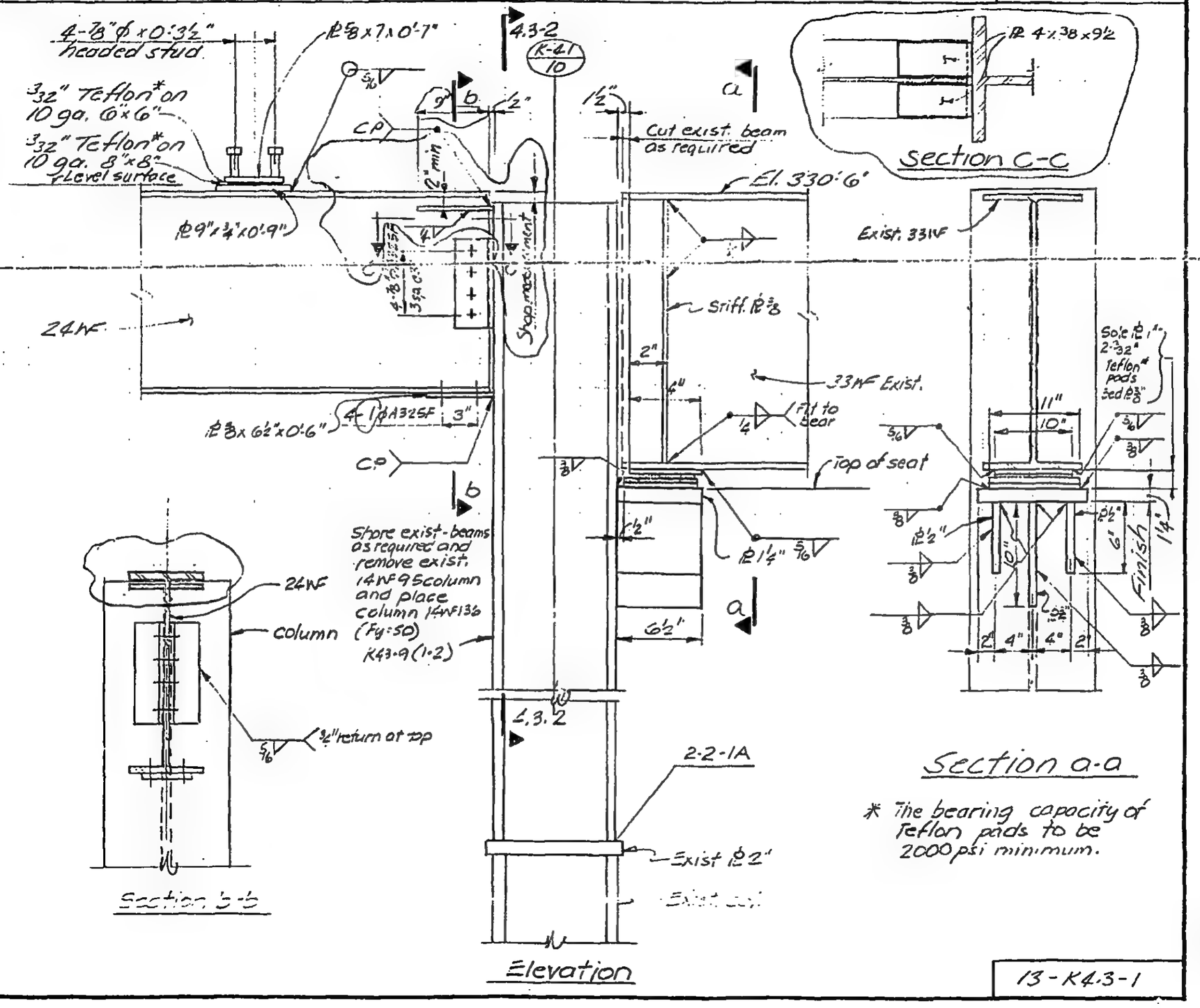

* The bearing capacity of Teflon pads to be 2000 psi minimum.

LICENSED PROFESSIONAL ENGINEER — LESLIE E. ROBERTSON — No 34360 — UNIVERSITY OF THE STATE OF NEW YORK

DESIGNED

DRAWN

REVIEWED

13-K4.3-1

SKILLING, HELLE, CHRISTIANSEN, ROBERTSON — Structural & Civil Engineers

PROJECT THE WORLD TRADE CENTER | TITLE BALLROOM GIRDER - END CONNECTION | DATE 11-3-72

REVISIONS

General revision released for construction 11-24-72

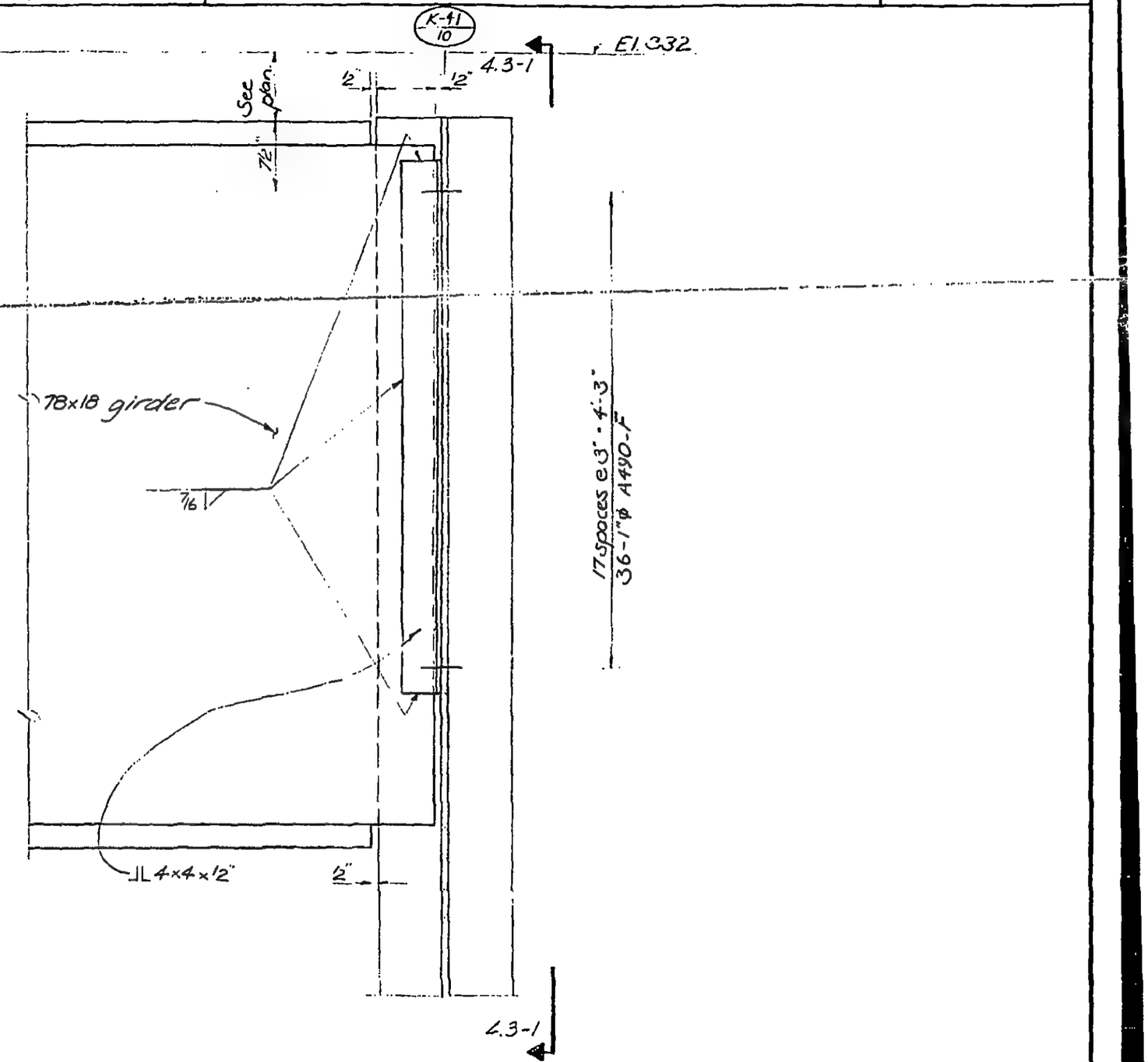

LICENSED PROFESSIONAL ENGINEER
LESLIE E. ROBERTSON
NO. 34360
UNIVERSITY OF THE STATE OF NEW YORK

DESIGNED

DRAWN

REVIEWED

13-K 4.3-2

SKILLING, HELLE, CHRISTIANSEN, ROBERTSON — Structural & Civil Engineers

PROJECT: THE WORLD TRADE CENTER | TITLE: BALLROOM GIRDERS - END CONNECTIONS | DATE: 11-3-72

REVISIONS

RELEASE FOR CONSTRUCTION 11-20-72

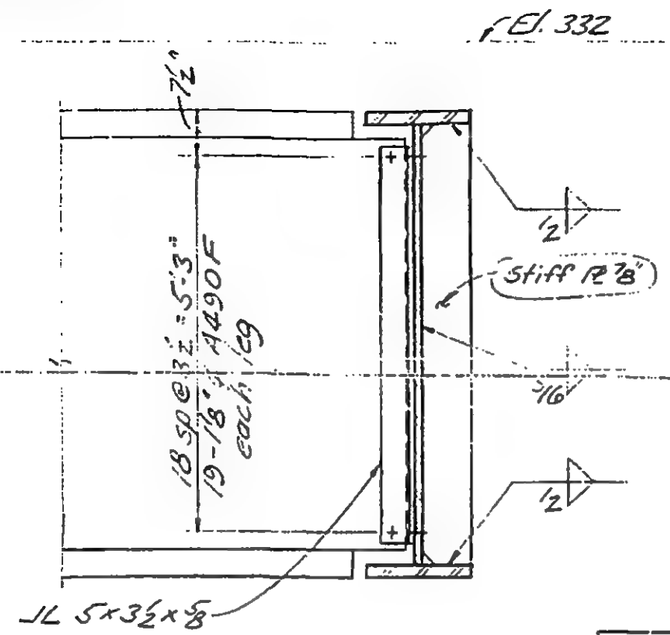

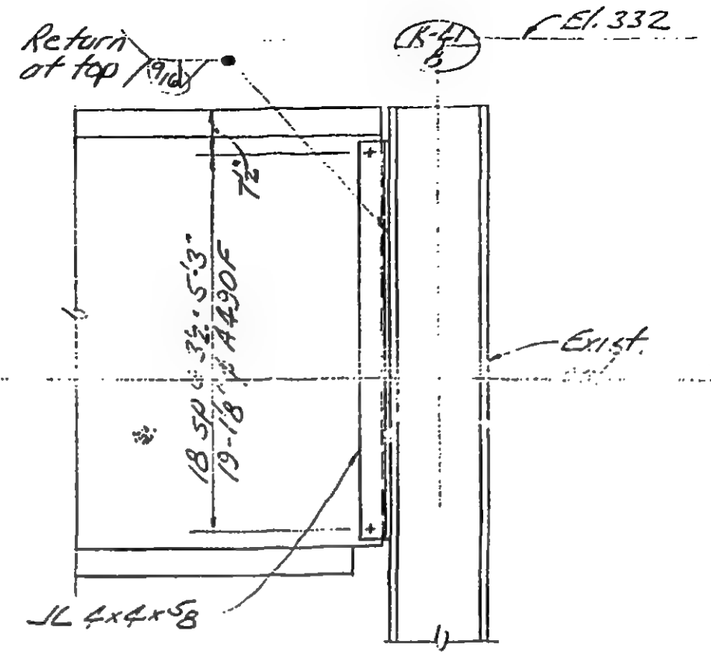

A | B

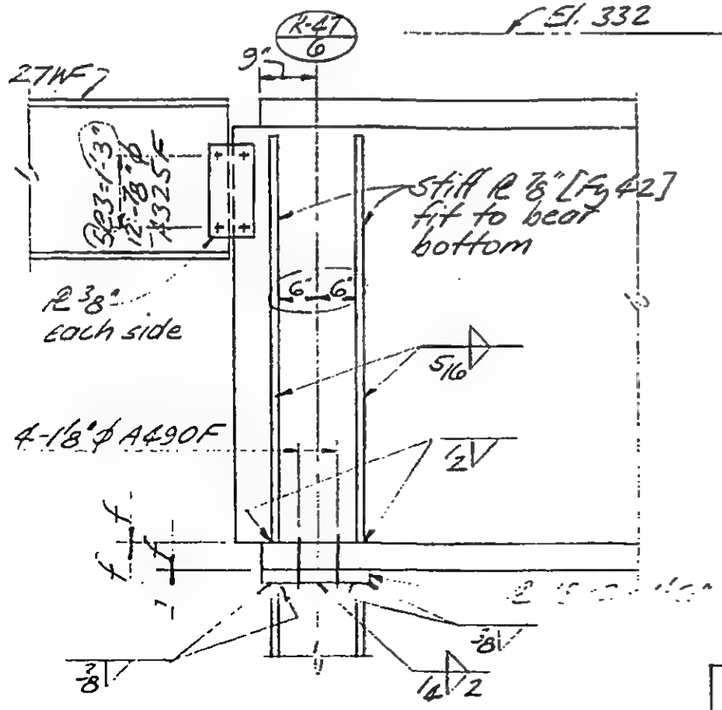

C

13-K4.3-3

LICENSED PROFESSIONAL ENGINEER — LESLIE E. ROBERTSON — No 34360 — UNIVERSITY OF THE STATE OF NEW YORK

DESIGNED

DRAWN

REVIEWED

SKILLING, HELLE, CHRISTIANSEN, ROBERTSON — Structural & Civil Engineers

PROJECT: THE WORLD TRADE CENTER | TITLE: BALLROOM GIRDER END CONNECTION | DATE: 11-3-72

REVISIONS

RELEASED FOR CONSTRUCTION 11-20-72

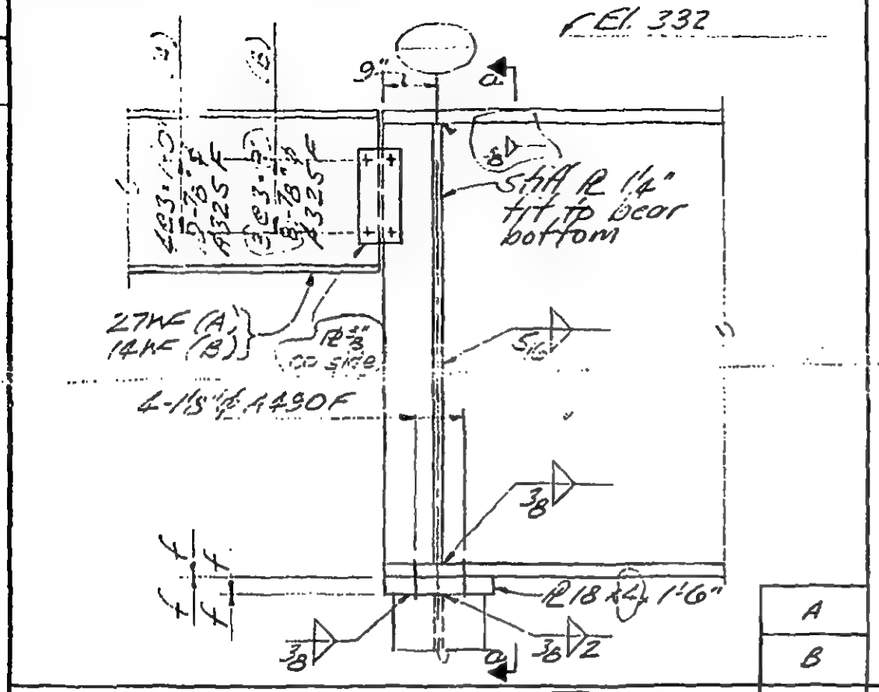

A

B

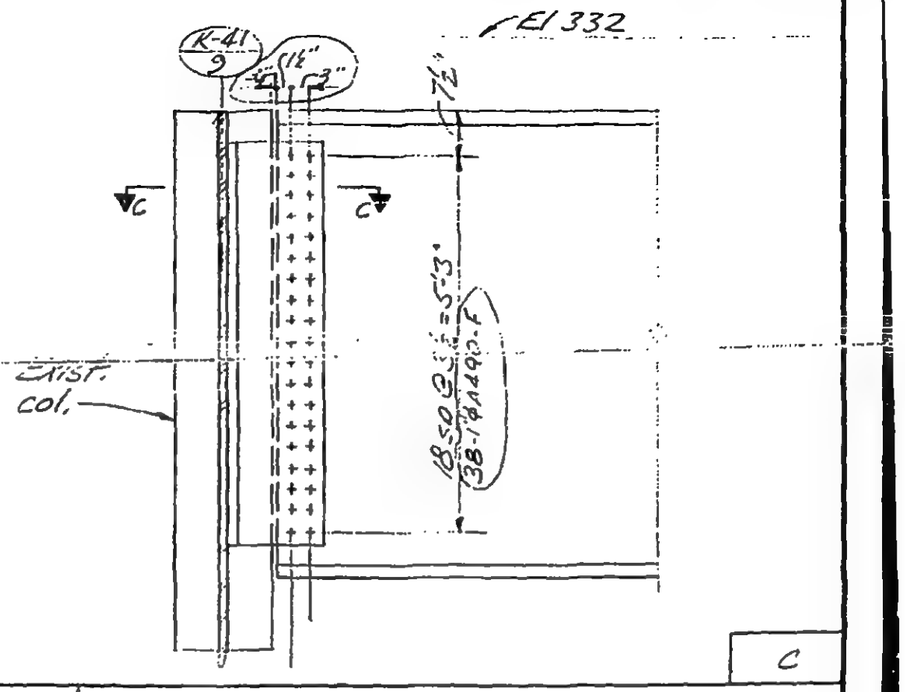

C

a

c

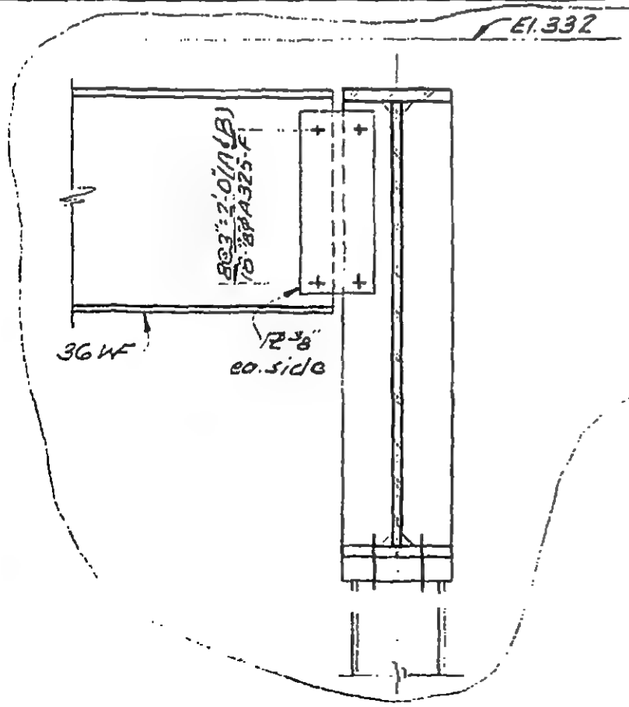

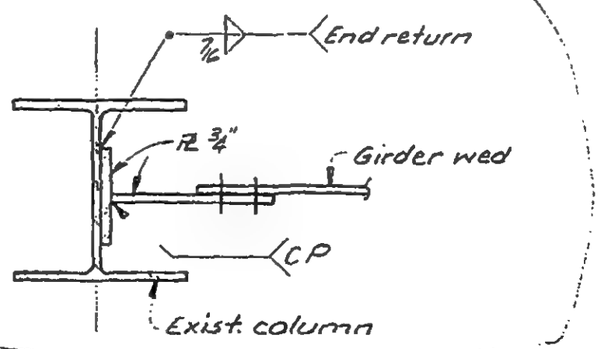

LICENSED PROFESSIONAL ENGINEER — LESLIE E. ROBERTSON — No. 34360 — UNIVERSITY OF THE STATE OF NEW YORK

DESIGNED

DRAWN

REVIEWED

13-K4.3-4

SKILLING, HELLE, CHRISTIANSEN, ROBERTSON — Structural & Civil Engineers

PROJECT THE WORLD TRADE CENTER

TITLE CONNECTIONS AT COLUMN

DATE 11-3-72

REVISIONS

Released for Construction 11-24-72

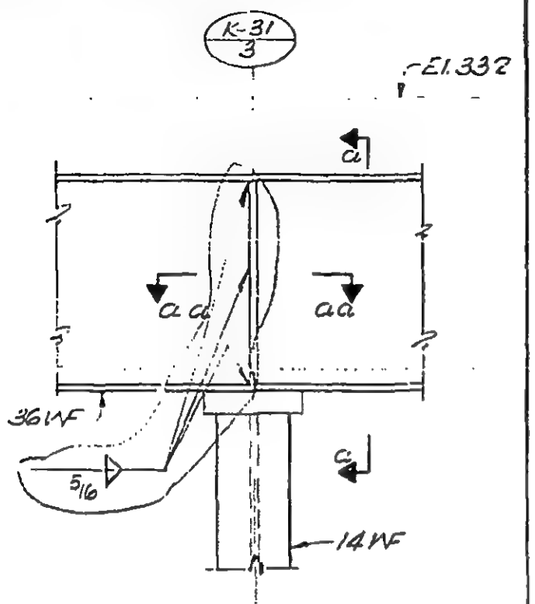

A

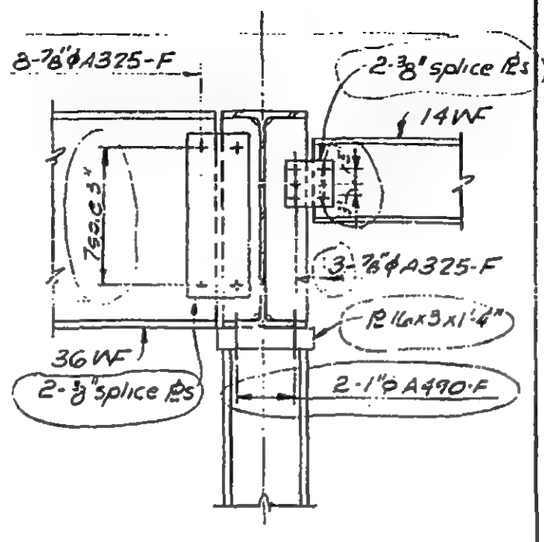

a a-a

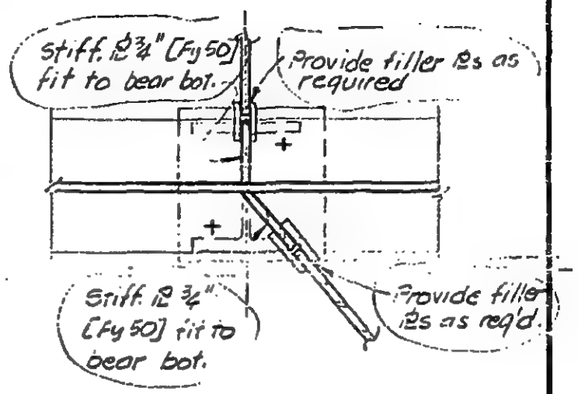

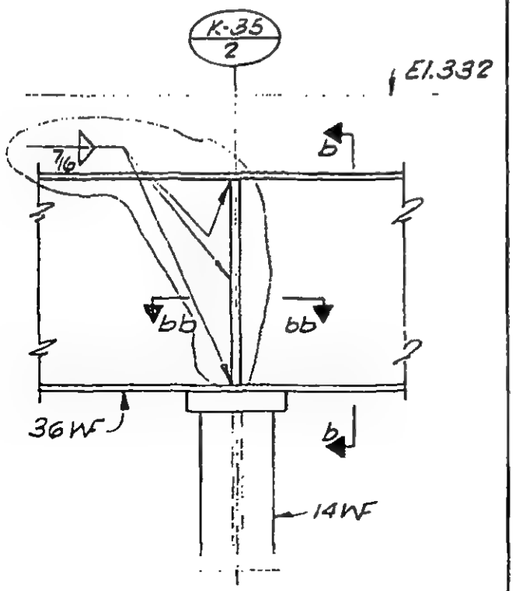

B

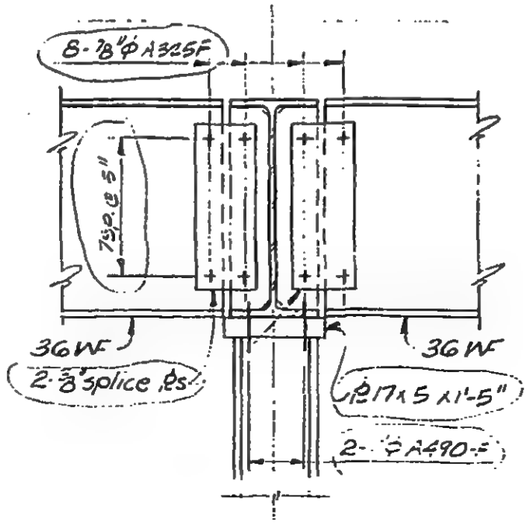

b bb

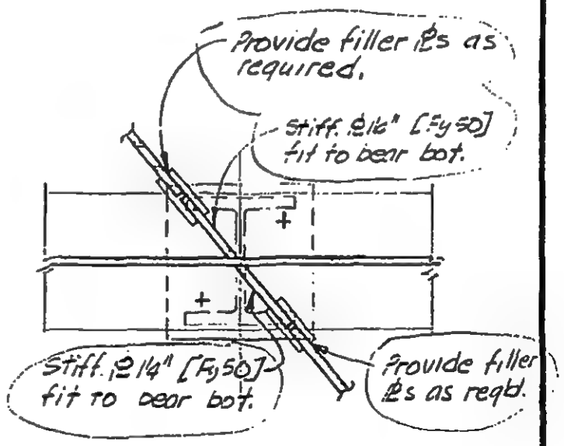

B

13-K5.1-1

LICENSED PROFESSIONAL ENGINEER LESLIE E. ROBERTSON No 34360 UNIVERSITY OF THE STATE OF NEW YORK

DESIGNED JWE

DRAWN TR

REVIEWED

SKILLING, HELLE, CHRISTIANSEN, ROBERTSON — Structural & Civil Engineers

PROJECT THE WORLD TRADE CENTER | TITLE CONNECTIONS AT COLUMN | DATE 11-3-72

REVISIONS

Released for construction 11-24-72

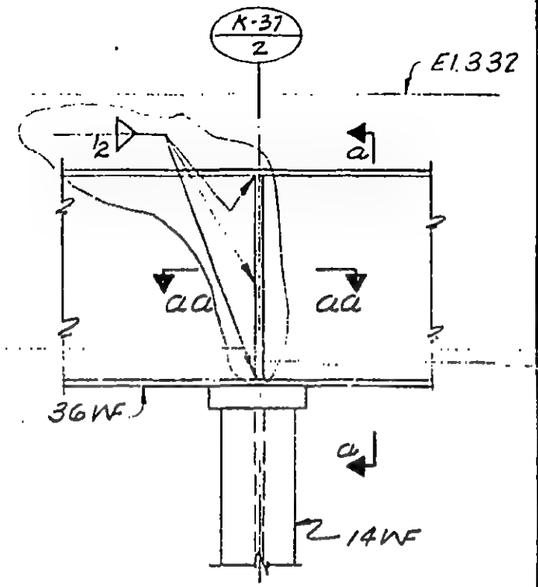

A

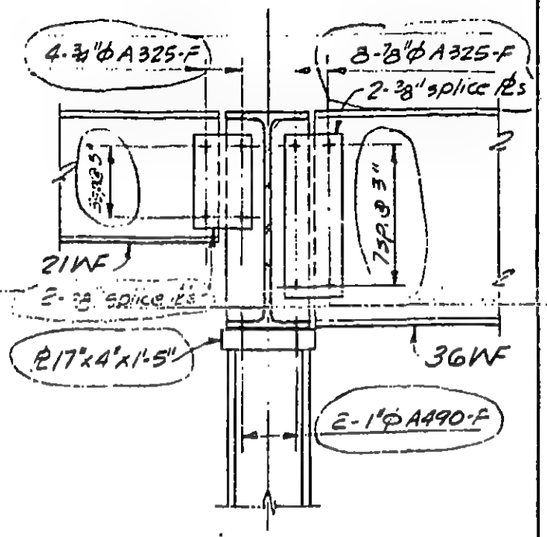

a aa

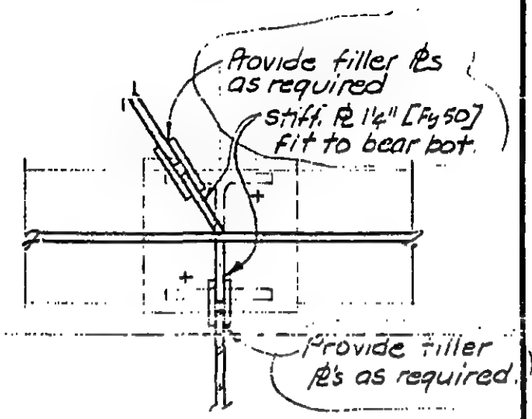

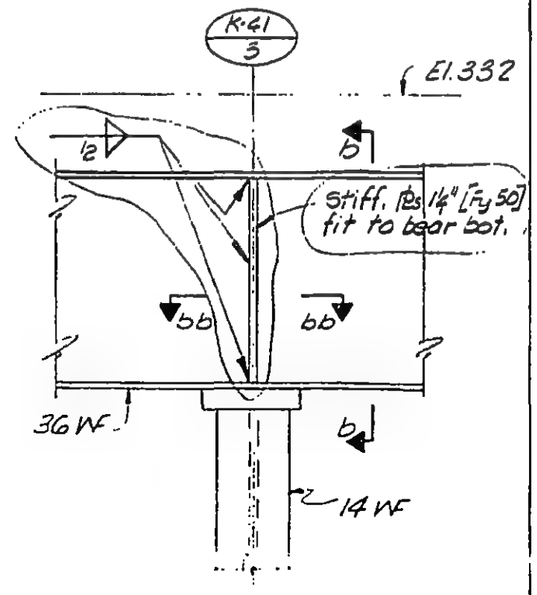

B

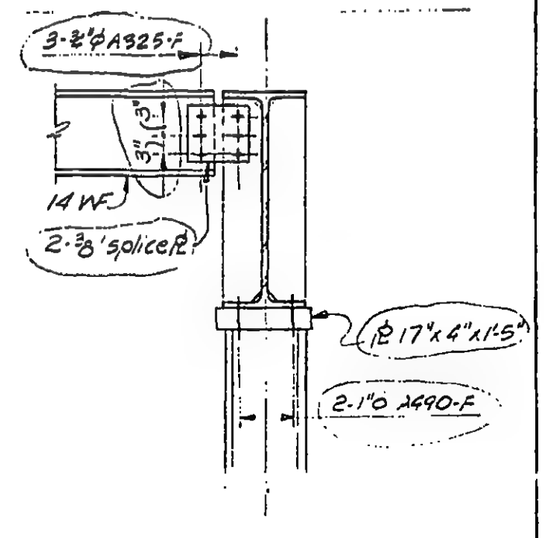

b bb

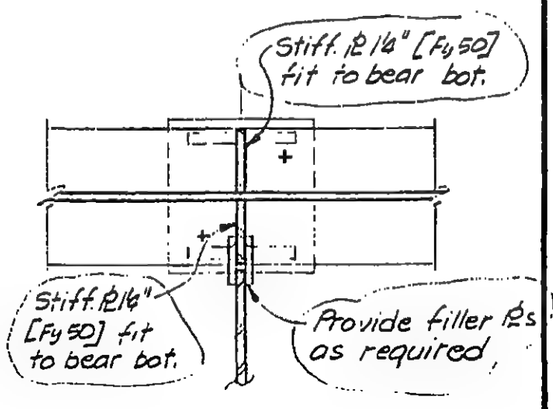

13-K5.1-2

LICENSED PROFESSIONAL ENGINEER — LESLIE E. ROBERTSON — No 34380 — UNIVERSITY OF THE STATE OF NEW YORK

DESIGNED NAB

DRAWN TR

REVIEWED

SKILLING, HELLE, CHRISTIANSEN, ROBERTSON — Structural & Civil Engineers

PROJECT: THE WORLD TRADE CENTER | TITLE: CONNECTION DETAIL AT CANTILEVER | DATE: 11-3-72

REVISIONS

Released for construction 11-24-72

4-20-73

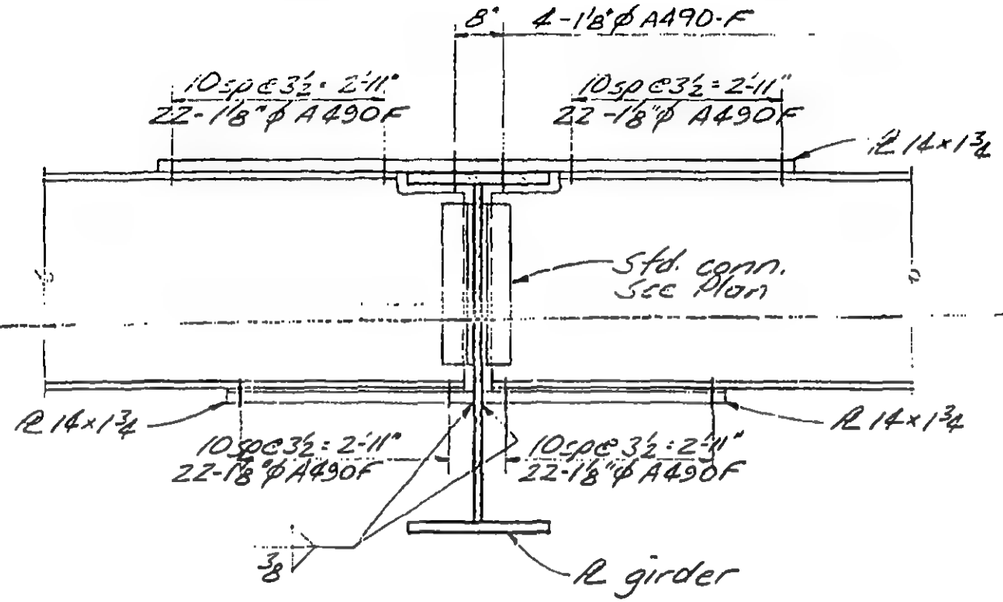

A
B

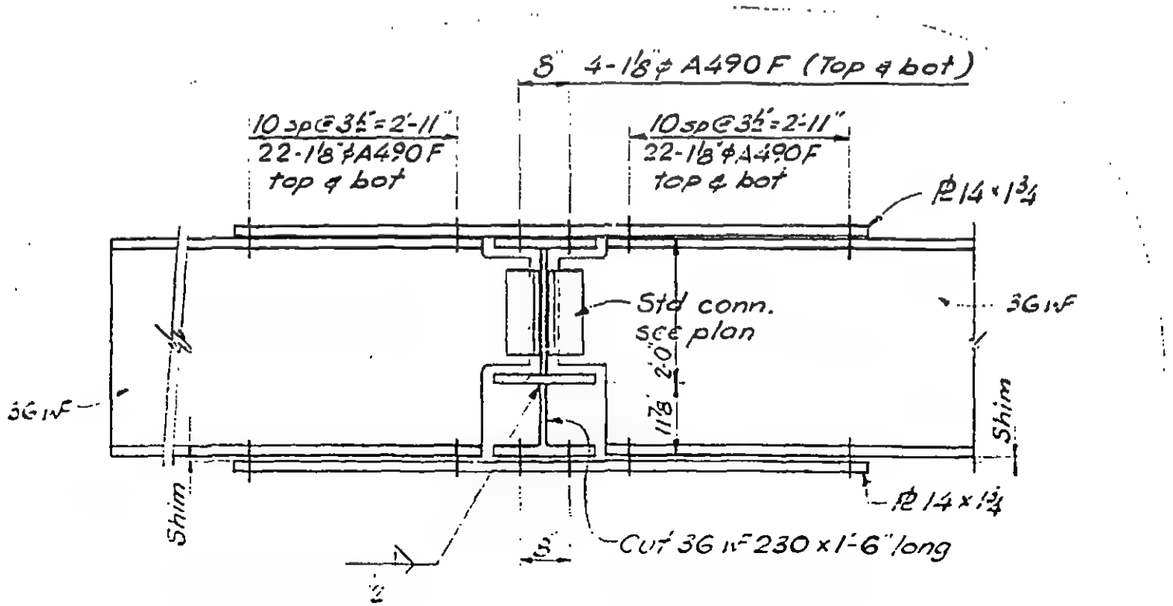

LICENSED PROFESSIONAL ENGINEER — LESLIE E. ROBERTSON — No 34360 — UNIVERSITY OF THE STATE OF NEW YORK

DESIGNED

DRAWN

REVIEWED

13-K5.2-1

SCALE

REVISIONS

Released for Construction 11-24-72

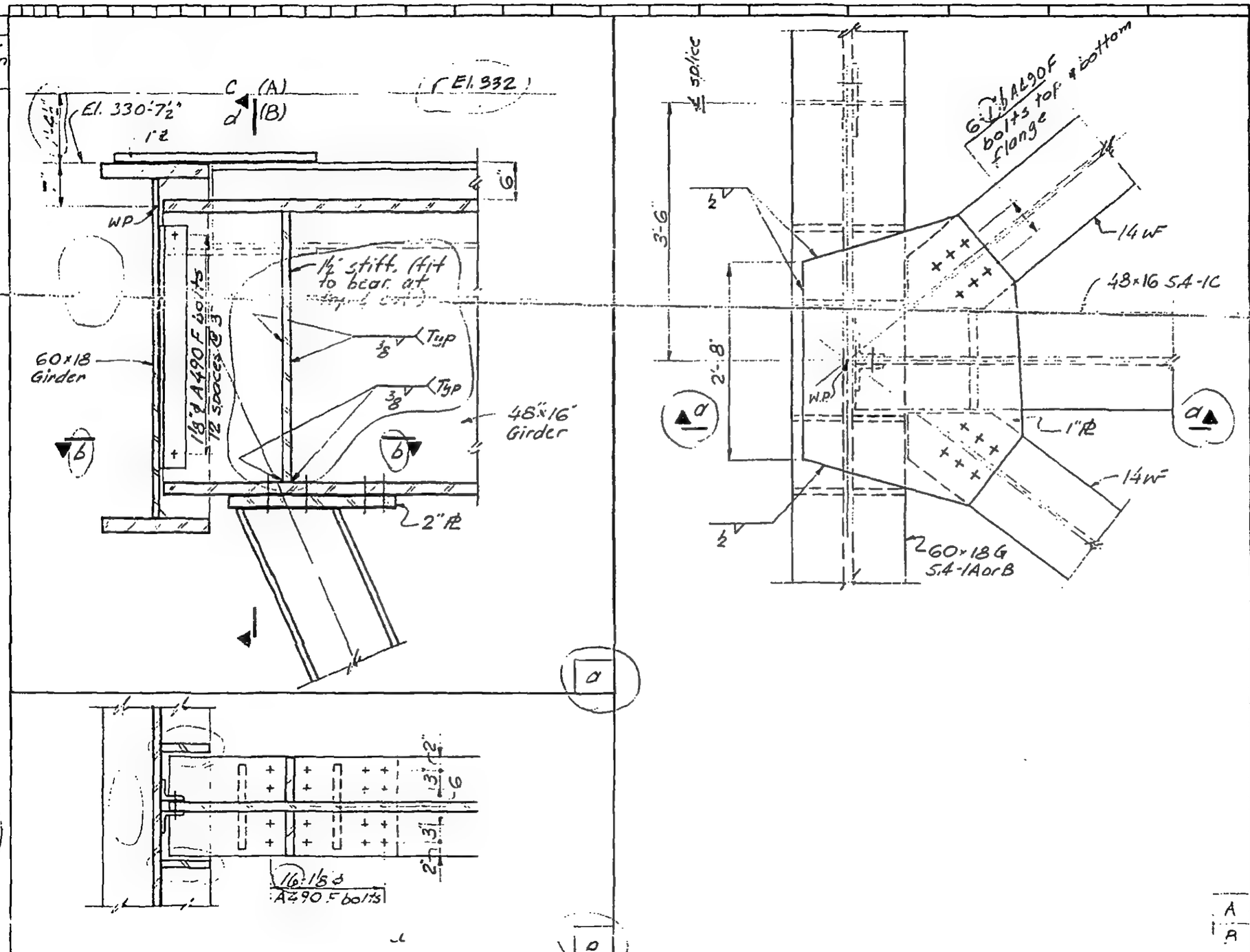

DESIGNED	PROJECT THE WORLD TRADE CENTER	TITLE CONNECTION DETAILS AT CANOPY	DATE 11-3-72
DRAWN JG	SKILLING, HELLE, CHRISTIANSEN, ROBERTSON	Structural & Civil Engineers	DWG NO 13-K5.3-1.1
REVIEWED			

SCALE

REVISIONS

Released for construction 11-24-72

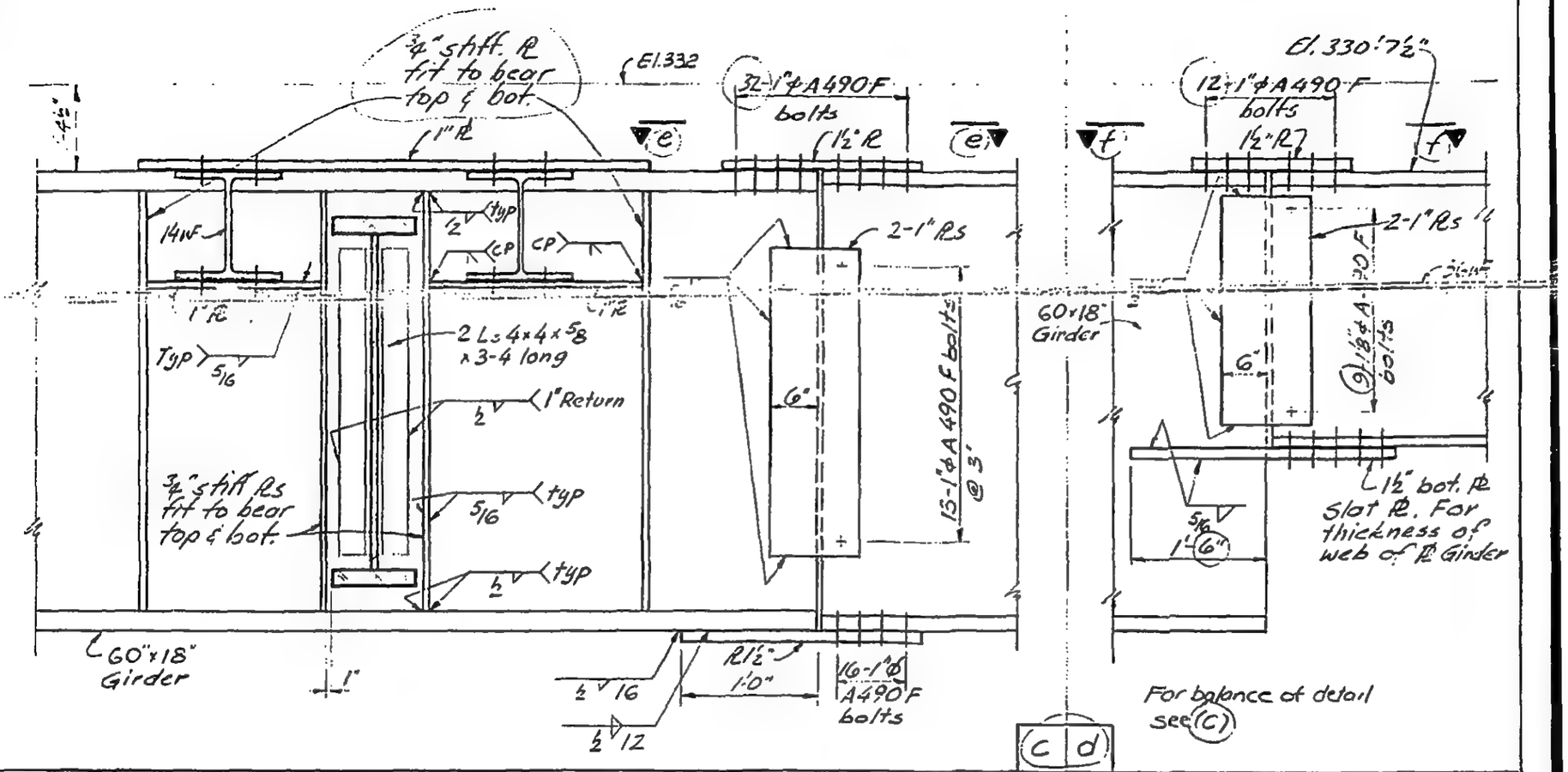

DESIGNED	PROJECT THE WORLD TRADE CENTER	TITLE CONNECTION DETAILS AT CANOPY	DATE 11-3-72
DRAWN JG	SKILLING, HELLE, CHRISTIANSEN, ROBERTSON — Structural & Civil Engineers		DWG. NO 13-K5.3-1.2
REVISED			

SKILLING, HELLE, CHRISTIANSEN, ROBERTSON — Structural & Civil Engineers

PROJECT: THE WORLD TRADE CENTER | TITLE: CONNECTION DETAILS AT CANOPY | DATE: 2-5-73

REVISIONS

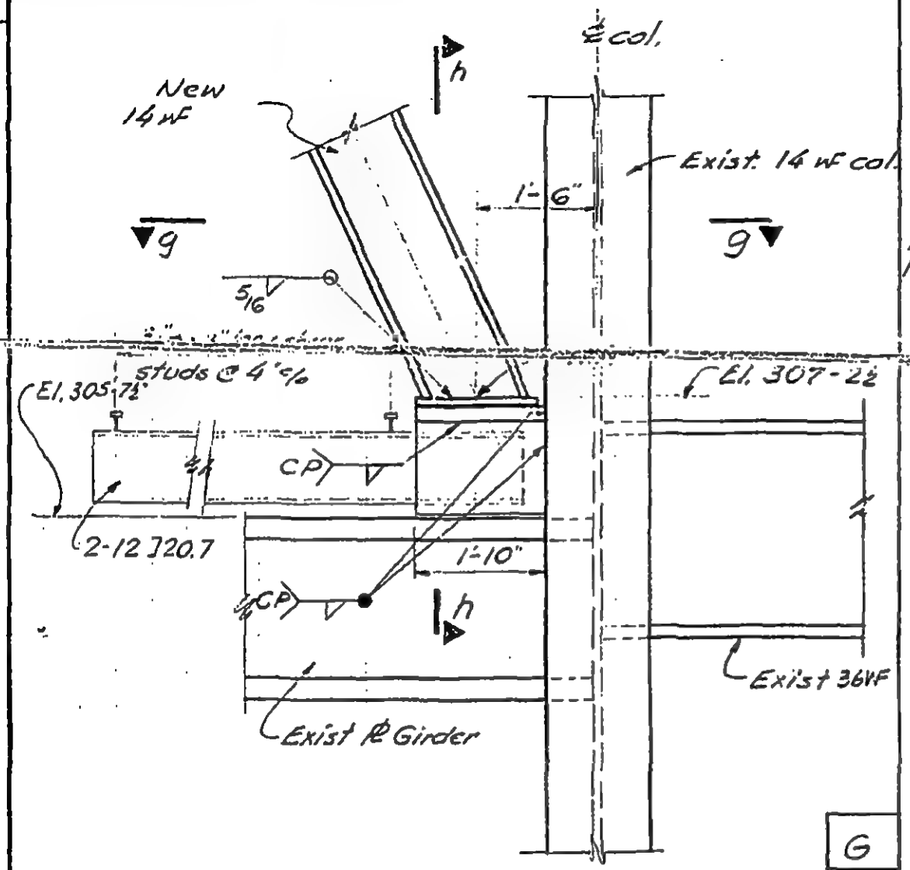

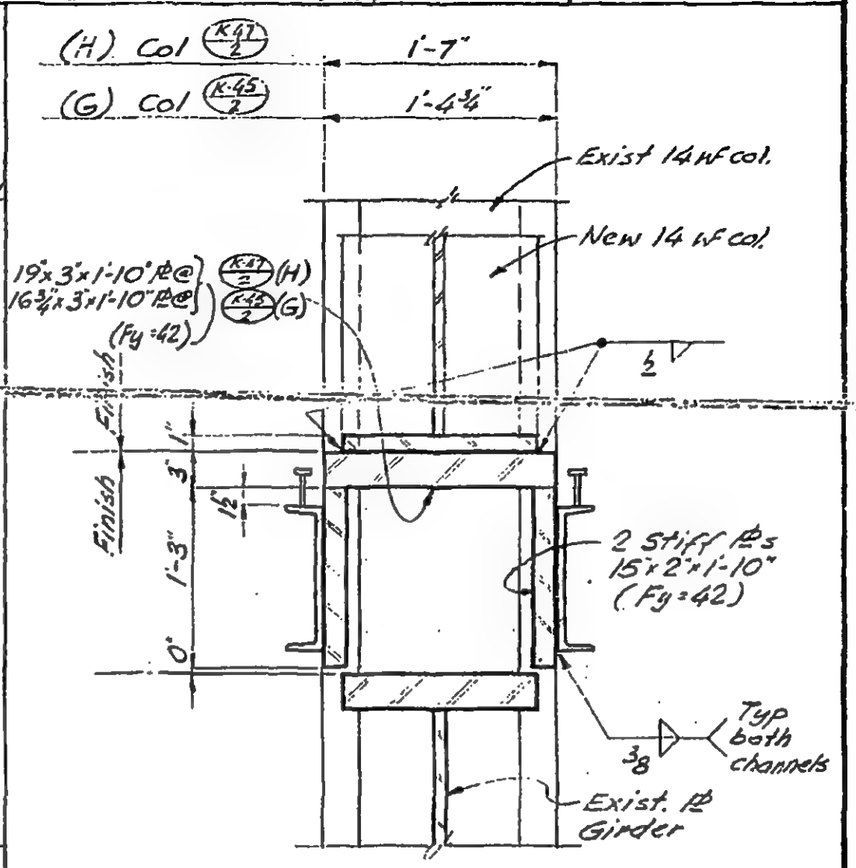

G

H

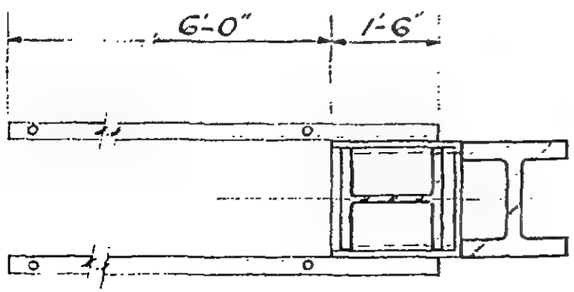

g h

13-K5.3-1.3

LICENSED PROFESSIONAL ENGINEER
LESLIE E. ROBERTSON
No 34360
UNIVERSITY OF THE STATE OF NEW YORK

DESIGNED

DRAWN John Gaccione

REVIEWED

SCALE

REVISIONS

Released for Construction 11-24-72

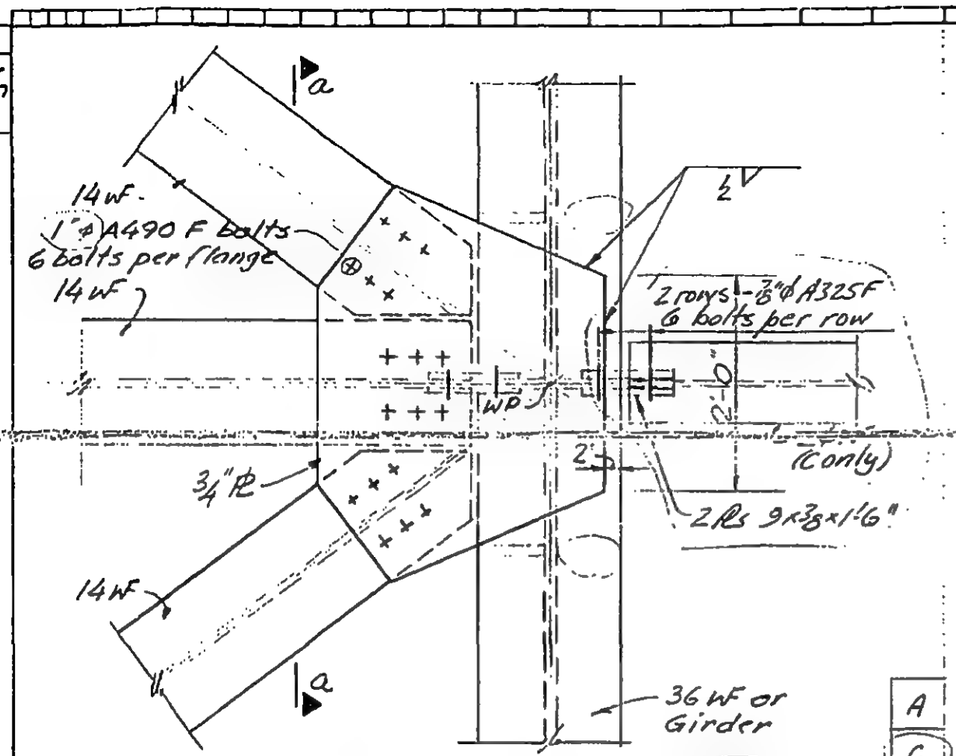

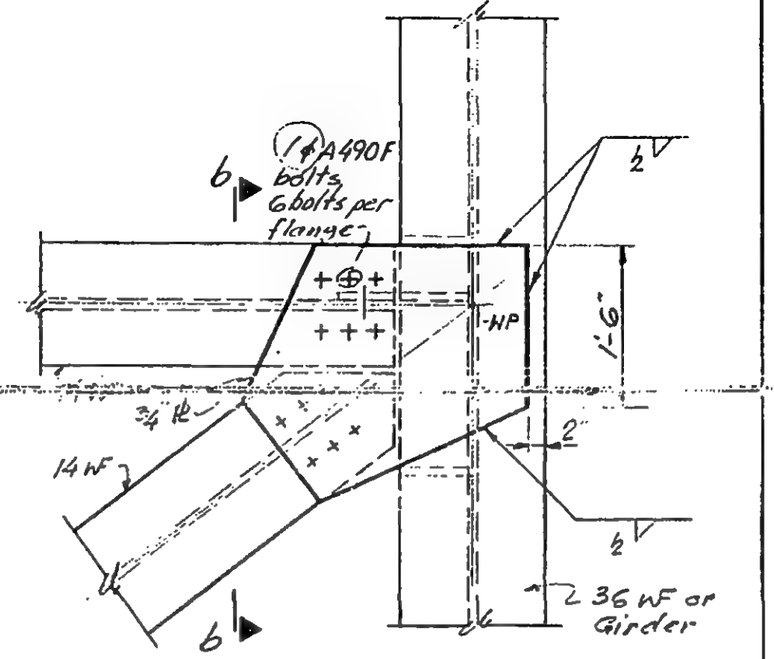

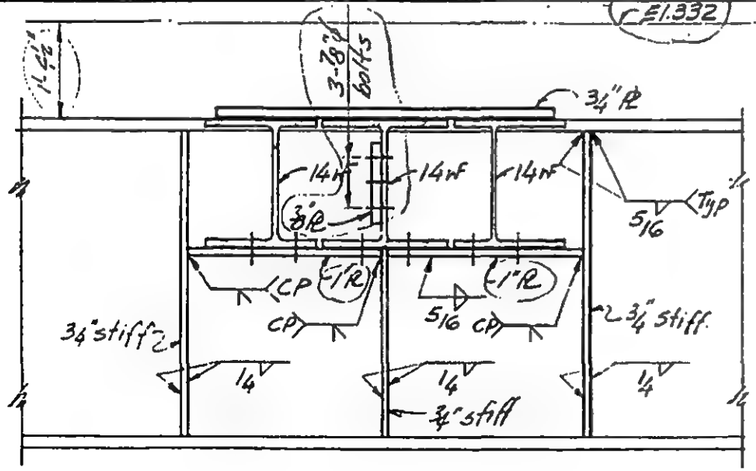

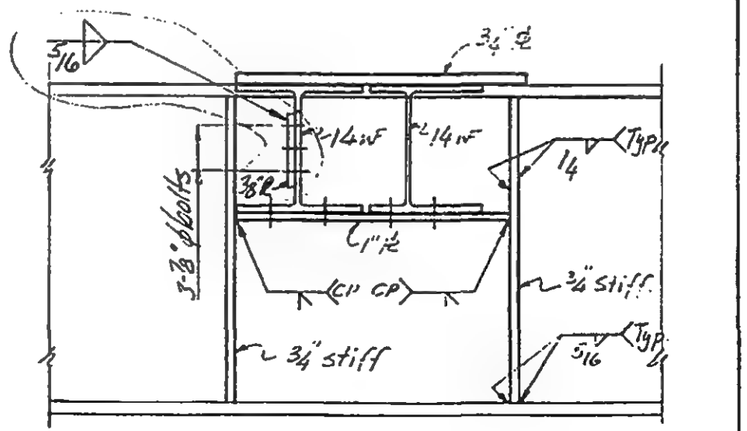

DESIGNED	PROJECT THE WORLD TRADE CENTER	TITLE CONNECTION DETAILS AT CANOPY	DATE 11-3-72
DRAWN JG	SKILLING, HELLE, CHRISTIANSEN, ROBERTSON	Structural & Civil Engineers	DWG. NO. 13-K5.3-2
REVISED			

SKILLING, HELLE, CHRISTIANSEN, ROBERTSON — Structural & Civil Engineers

PROJECT: THE WORLD TRADE CENTER | TITLE: CONNECTION DETAILS AT CANOPY | DATE: 11-24-72

REVISIONS

Released for construction 11-24-72

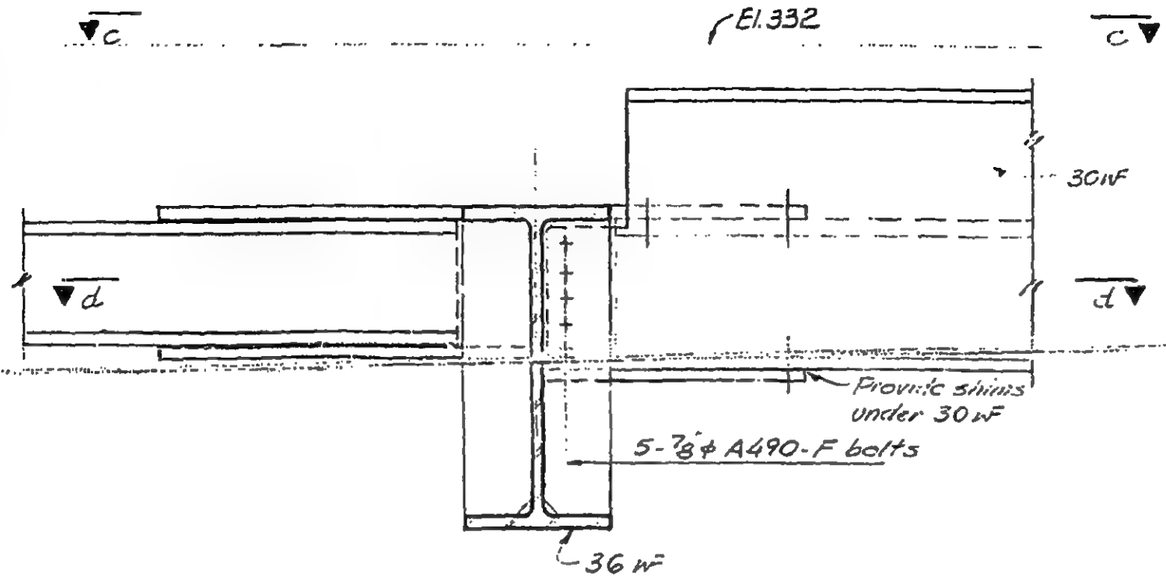

a

LICENSED PROFESSIONAL ENGINEER
LESLIE E. ROBERTSON
NO 34360
UNIVERSITY OF THE STATE OF NEW YORK

DESIGNED

DRAWN

REVIEWED

13-K5.3-3.1

SKILLING, HELLE, CHRISTIANSEN, ROBERTSON — Structural & Civil Engineers

PROJECT THE WORLD TRADE CENTER | TITLE CONNECTION DETAIL AT CANOPY | DATE 11-24-72

REVISIONS

Released for construction 11-24-72

4-20-73

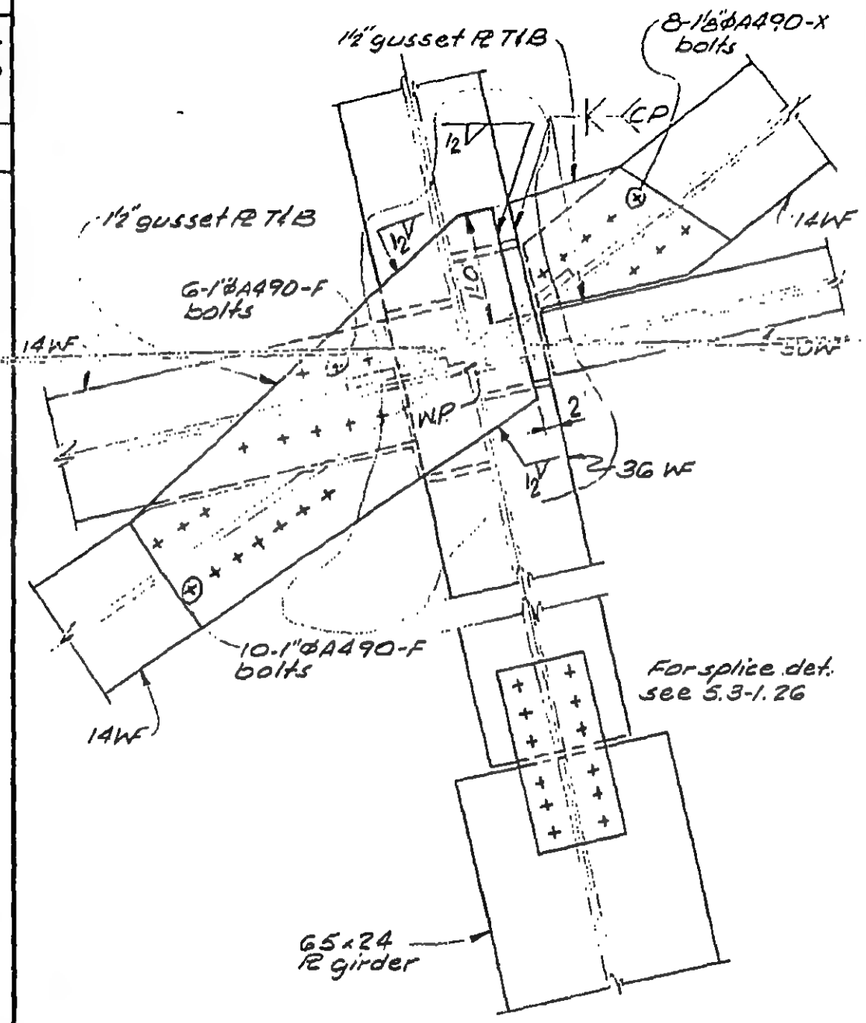

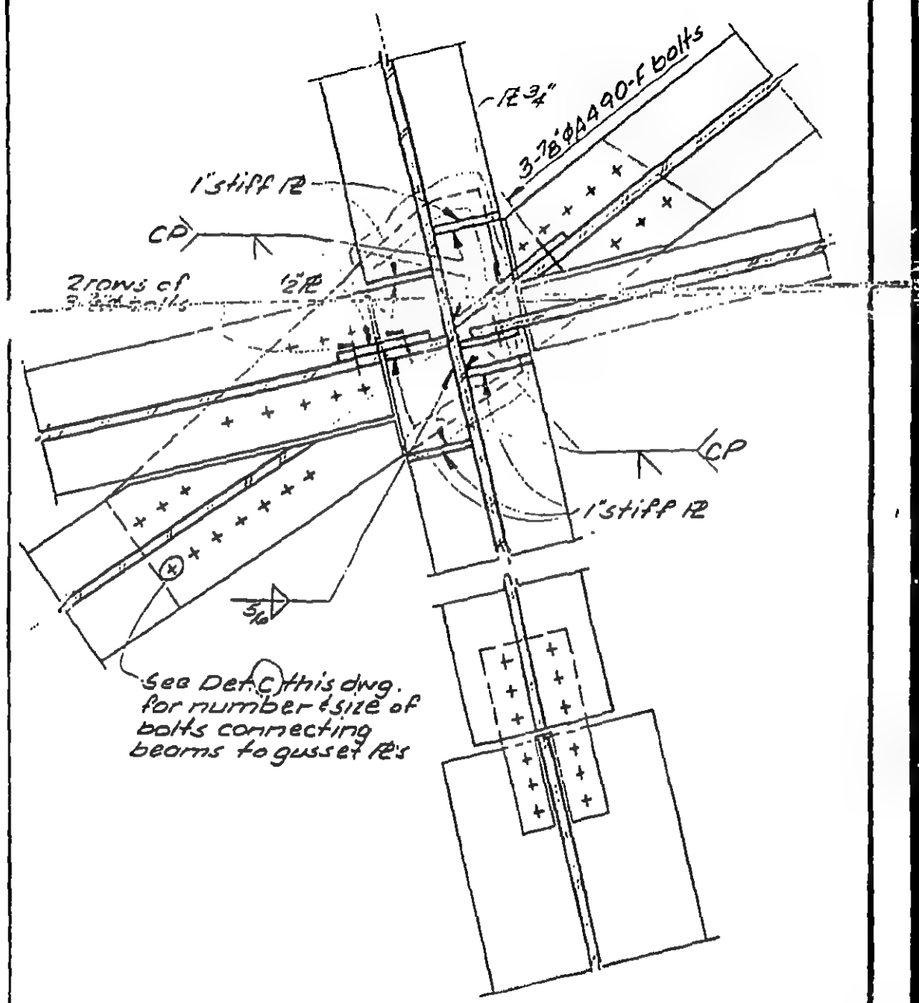

DESIGNED

DRAWN T.R.

REVIEWED

c | d

13-K5.3-3.2

SKILLING, HELLE, CHRISTIANSEN, ROBERTSON — Structural & Civil Engineers

PROJECT: TIIE WORLD TRADE CENTER | TITLE: CONNECTION DETAILS AT CANOPY | DATE: 11-24-72

REVISIONS

Released for construction 11-24-72

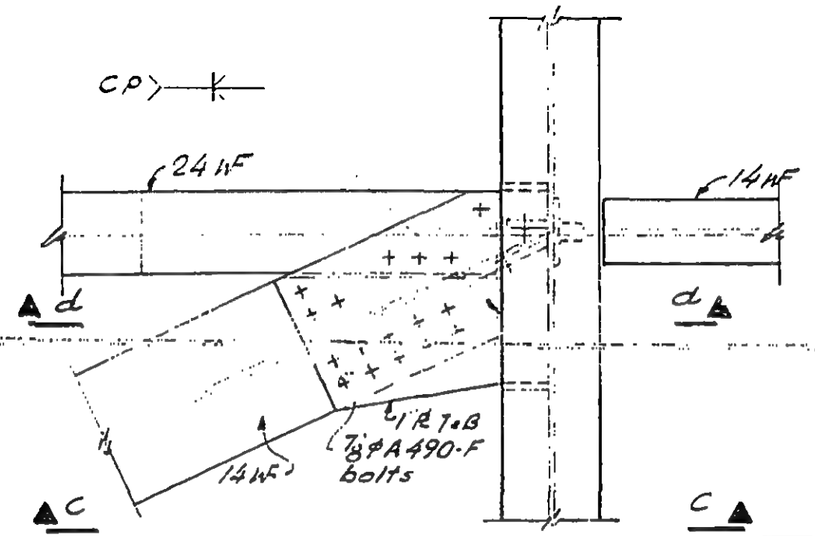

a | c

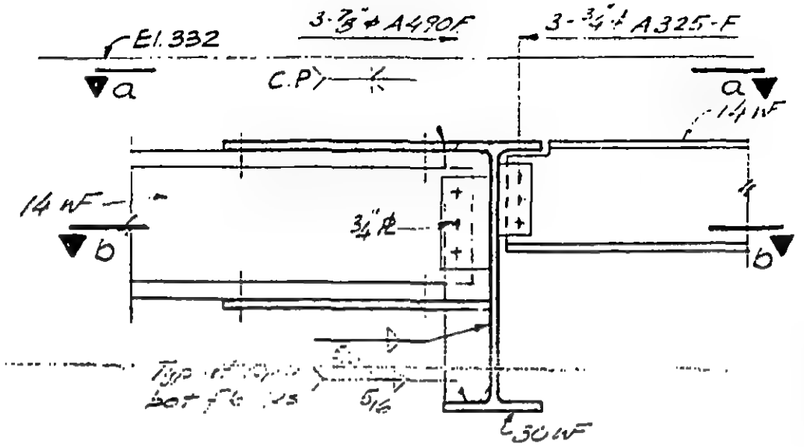

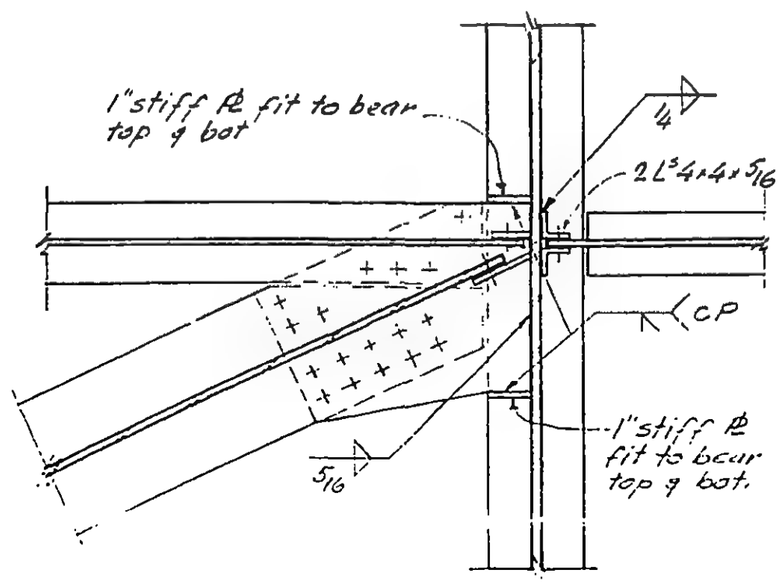

b | d

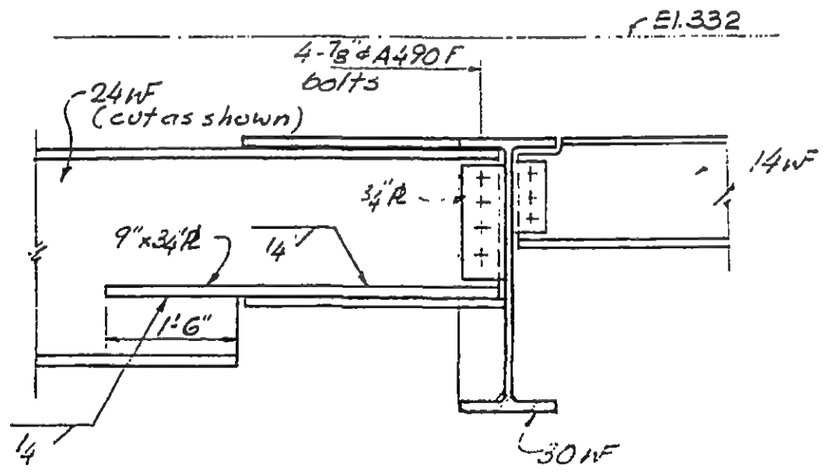

13-K5.3-4

LICENSED PROFESSIONAL ENGINEER
LESLIE E. ROBERTSON
No 34360
UNIVERSITY OF THE STATE OF NEW YORK

DESIGNED

DRAWN

REVIEWED

SKILLING, HELLE, CHRISTIANSEN, ROBERTSON — Structural & Civil Engineers

PROJECT: THE WORLD TRADE CENTER | TITLE: CONNECTION DETAILS AT CANOPY | DATE: 11-24-72

REVISIONS

Released for construction 11-24-72

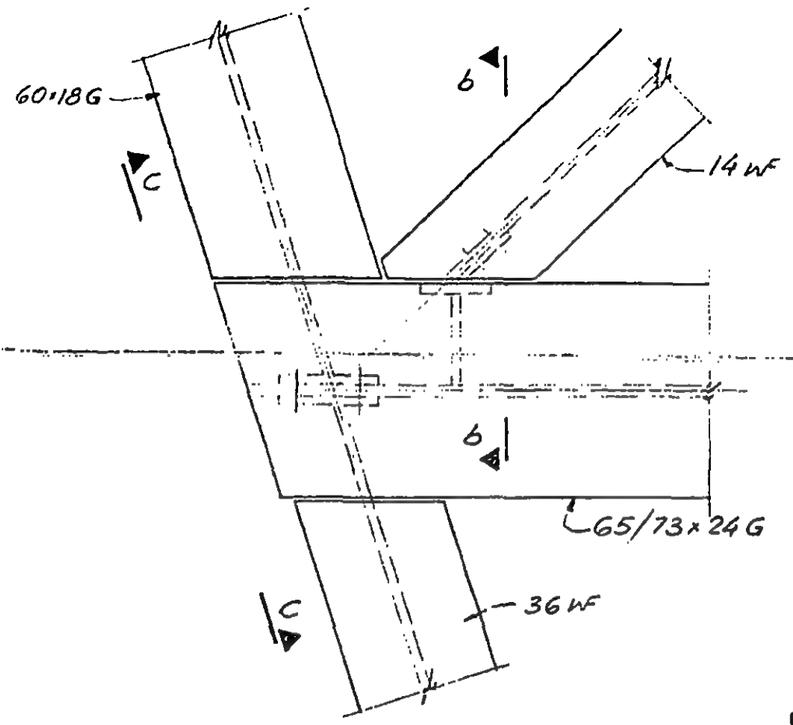

a

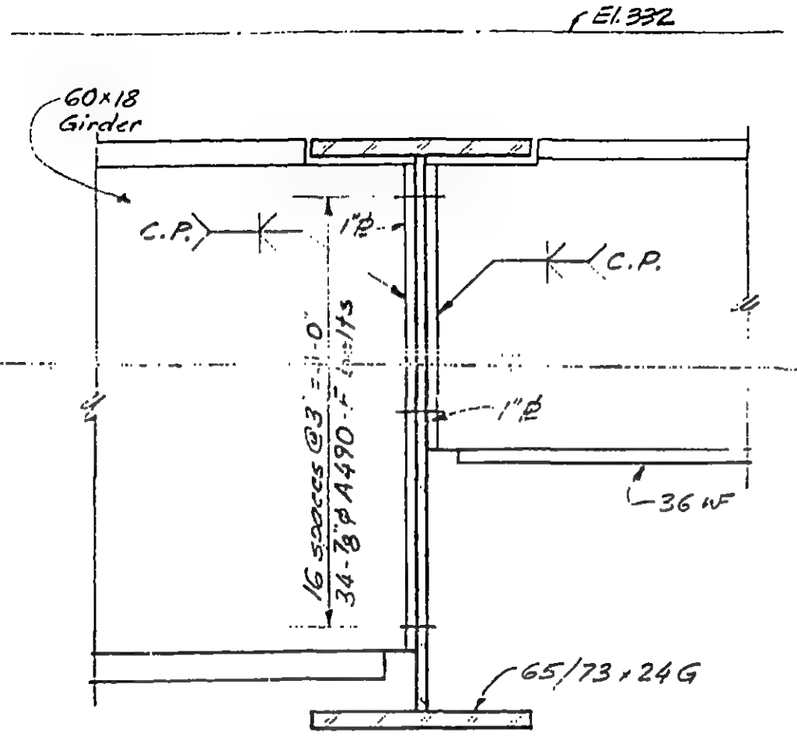

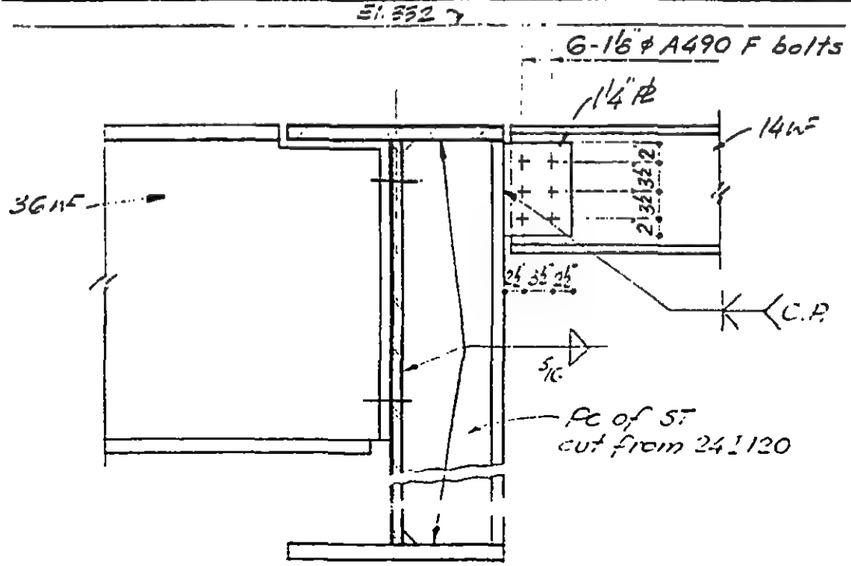

b | c

13-K5.3-5

LICENSED PROFESSIONAL ENGINEER — LESLIE E. ROBERTSON — No 34360 — UNIVERSITY OF THE STATE OF NEW YORK

DESIGNED

DRAWN

REVIEWED

SKILLING, HELLE, CHRISTIANSEN, ROBERTSON — Structural & Civil Engineers

PROJECT THE WORLD TRADE CENTER | TITLE CONNECTION DETAILS AT CANOPY | DATE 11-24-72

REVISIONS

Released for construction 11-24-72

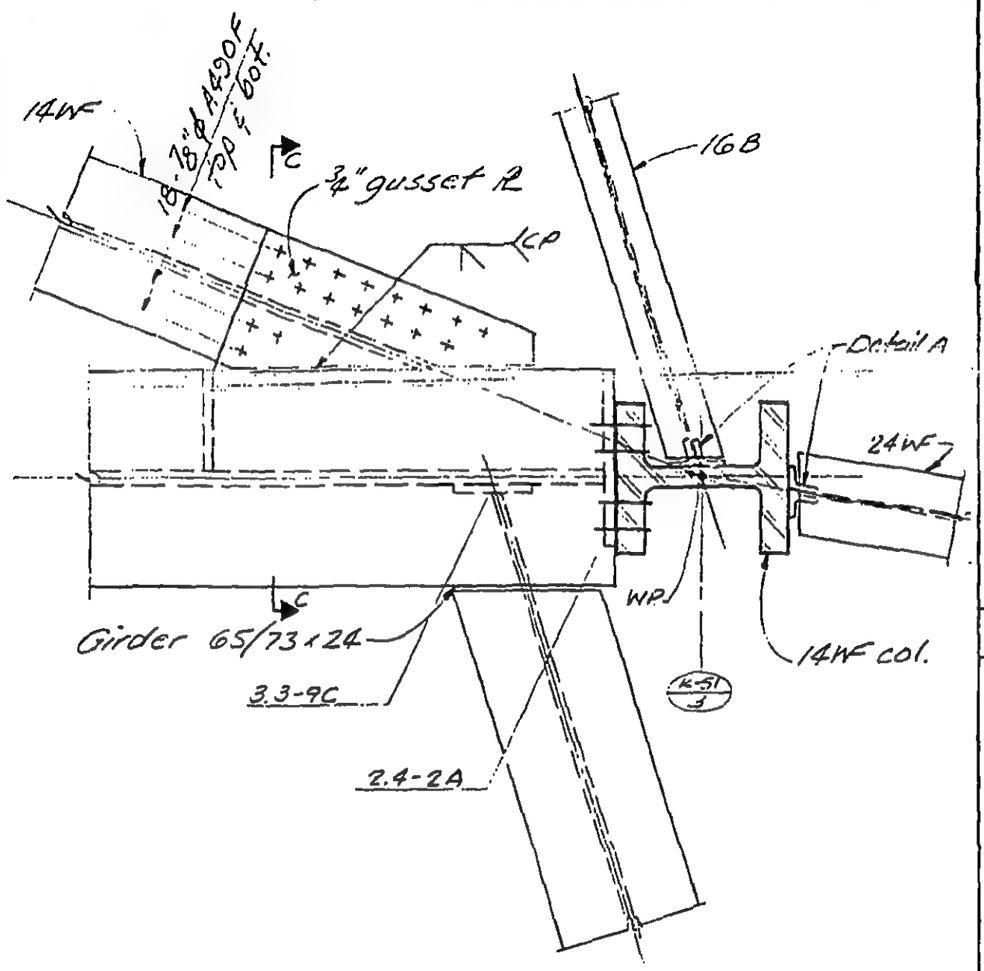

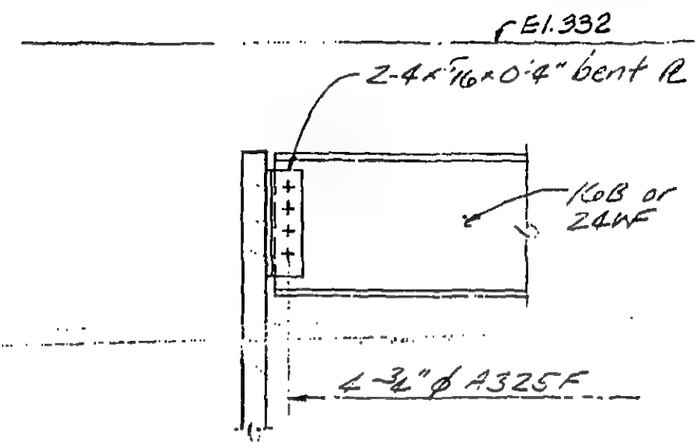

Detail A

b

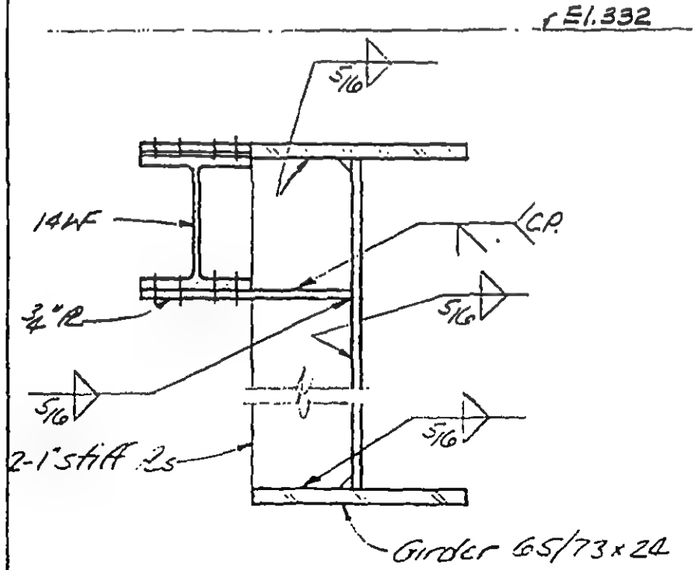

a | c

13-K5.3-6

LICENSED PROFESSIONAL ENGINEER LESLIE E. ROBERTSON NO 34360 UNIVERSITY OF THE STATE OF NEW YORK

DESIGNED

DRAWN

REVIEWED

SKILLING, HELLE, CHRISTIANSEN, ROBERTSON — Structural & Civil Engineers

PROJECT THE WORLD TRADE CENTER | TITLE CONNECTION DETAILS AT CANOPY | DATE 11-24-72

REVISIONS

Released for construction 11-24-72

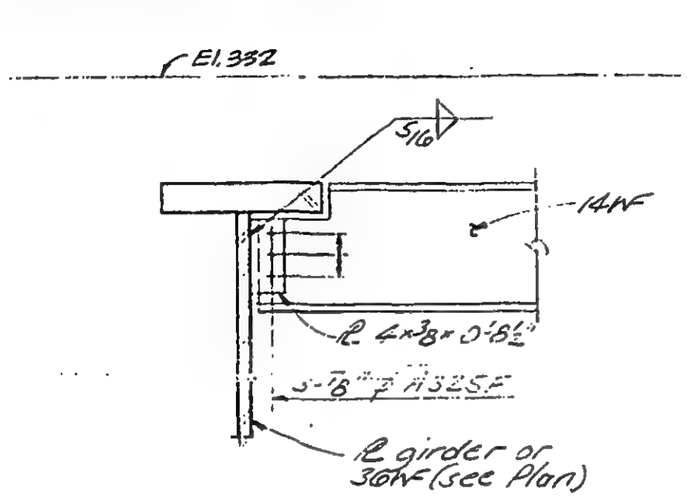

A

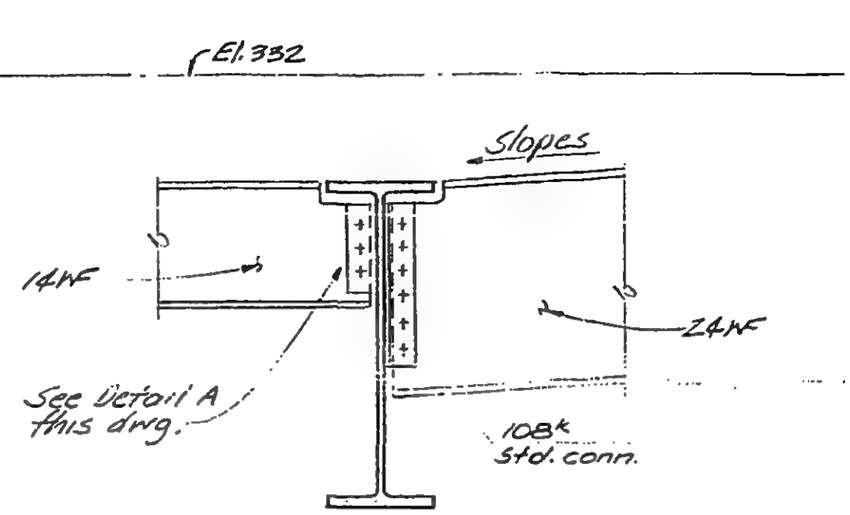

B

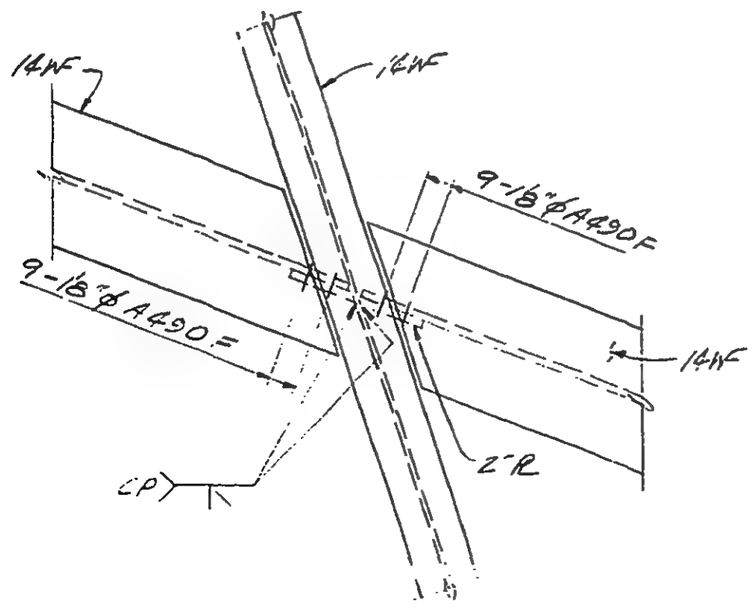

C

LICENSED PROFESSIONAL ENGINEER — LESLIE E. ROBERTSON — No 34360 — UNIVERSITY OF THE STATE OF NEW YORK

DESIGNED

DRAWN

REVIEWED

13-K5.3-7

SKILLING, HELLE, CHRISTIANSEN, ROBERTSON — Structural & Civil Engineers

PROJECT THE WORLD TRADE CENTER | TITLE GIRDER DETAILS AT CANOPY | DATE 11-3-72

REVISIONS

Released for construction 11-24-72

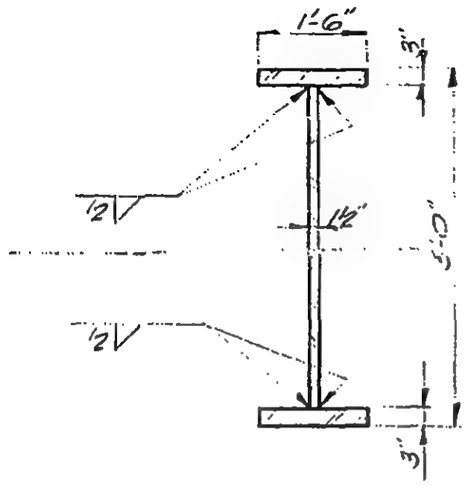

A

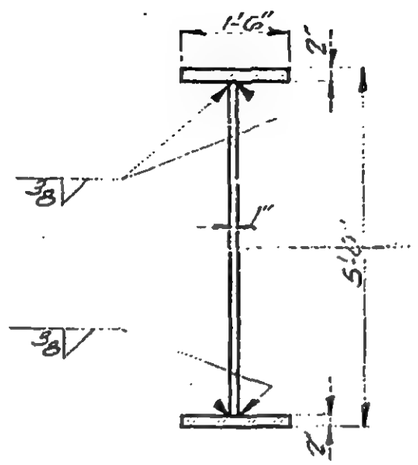

B

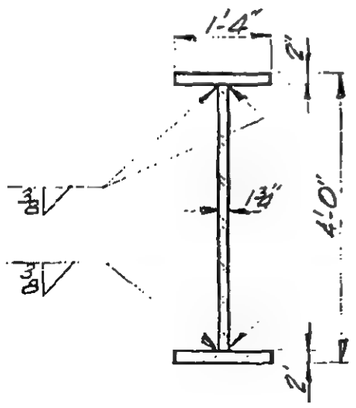

C

LICENSED PROFESSIONAL ENGINEER LESLIE E. ROBERTSON No 34360 UNIVERSITY OF THE STATE OF NEW YORK

DESIGNED

DRAWN TR

REVIEWED

13-K5.4-1

SKILLING, HELLE, CHRISTIANSEN, ROBERTSON — Structural & Civil Engineers

PROJECT THE WORLD TRADE CENTER | TITLE CONNECTIONS FOR FUTURE CONOPY | DATE 11-3-72

REVISIONS

Released for construction 11-24-72

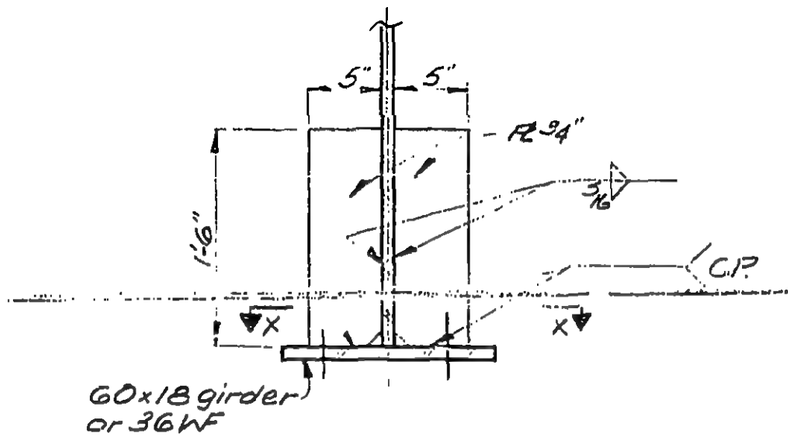

60x18 girder or 36WF

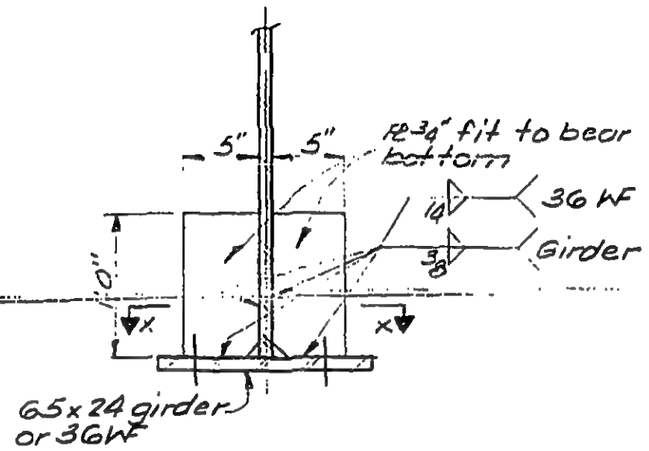

65x24 girder or 36WF

A B

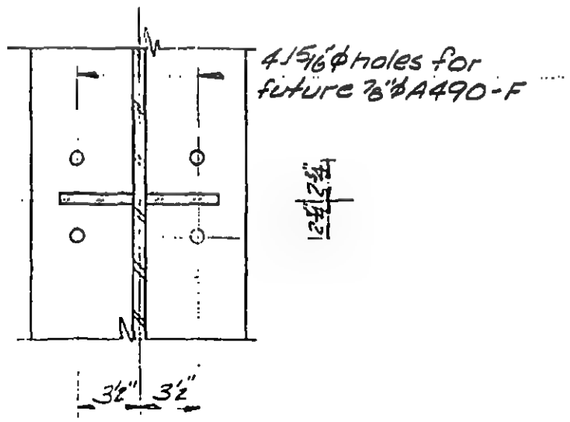

X

13-K5.5-1

LICENSED PROFESSIONAL ENGINEER LESLIE E. ROBERTSON No 34360 UNIVERSITY OF THE STATE OF NEW YORK

DESIGNED

DRAWN TR

REVIEWED

SKILLING, HELLE, CHRISTIANSEN, ROBERTSON — Structural & Civil Engineers

PROJECT THE WORLD TRADE CENTER | TITLE SLIDE CONNECTIONS TOWER B | DATE 11-3-72

REVISIONS

Released for construction 11-20-72

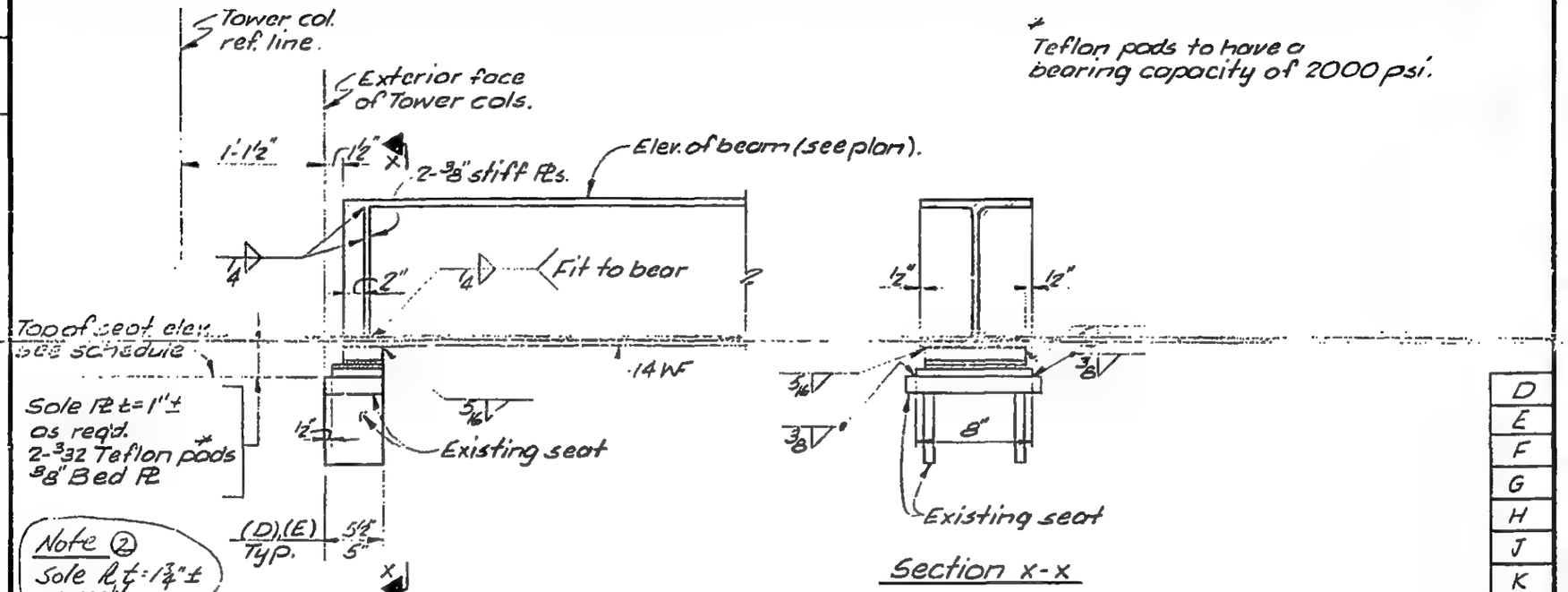

* Teflon pads to have a bearing capacity of 2000 psi.

D
E
F
G
H
J
K
M

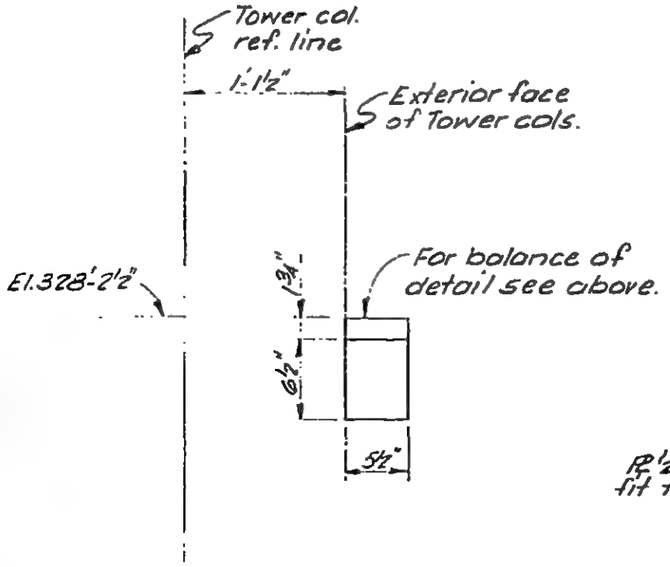

Note ①
Remove exist. seat and replace with new seat.

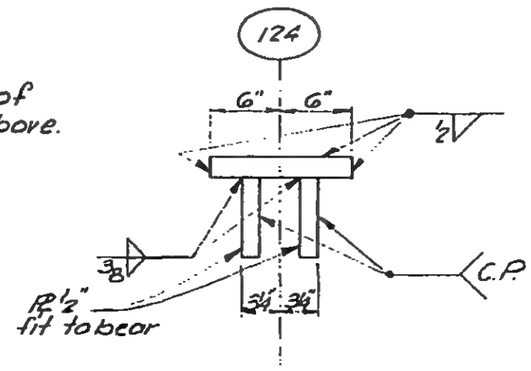

Schedule

Detail Number	Elevation Top of Seat
② D	329'-3⅝"
① E	328'-2½"
F	324'-1"
G	322'-8½"
H	318'-7"
J	317'-2½"
K	313'-1"
M	311'-8½"

LICENSED PROFESSIONAL ENGINEER
LESLIE E. ROBERTSON
No 34360
UNIVERSITY OF THE STATE OF NEW YORK

DESIGNED

SKILLING, HELLE, CHRISTIANSEN, ROBERTSON — Structural & Civil Engineers

PROJECT THE WORLD TRADE CENTER | TITLE SLIDE CONNECTIONS TOWER B | DATE 11-3-72

REVISIONS

RELEASED FOR CONSTRUCTION 11-20-72

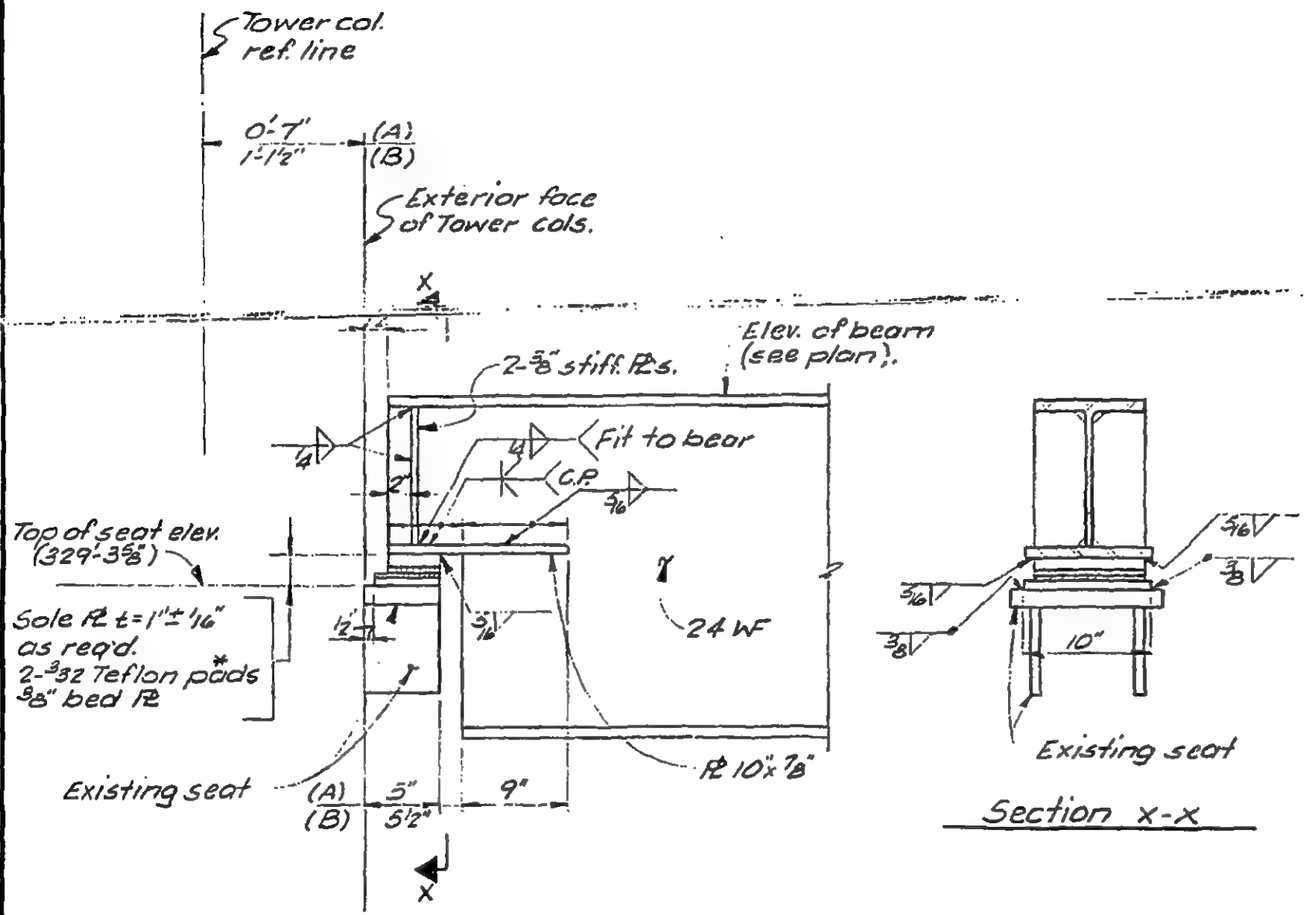

Section X-X

* Teflon pads to have a bearing capacity of 2000 psi.

LICENSED PROFESSIONAL ENGINEER — LESLIE E. ROBERTSON — No 34360 — UNIVERSITY OF THE STATE OF NEW YORK

DESIGNED

DRAWN TR

REVIEWED

A
B

13-KG.1-2

SKILLING, HELLE, CHRISTIANSEN, ROBERTSON — Structural & Civil Engineers

PROJECT: THE WORLD TRADE CENTER | TITLE: SLIDE CONNECTION Tower B | DATE: 11-3-72

REVISIONS

RELEASED FOR CONSTRUCTION 11-20-72

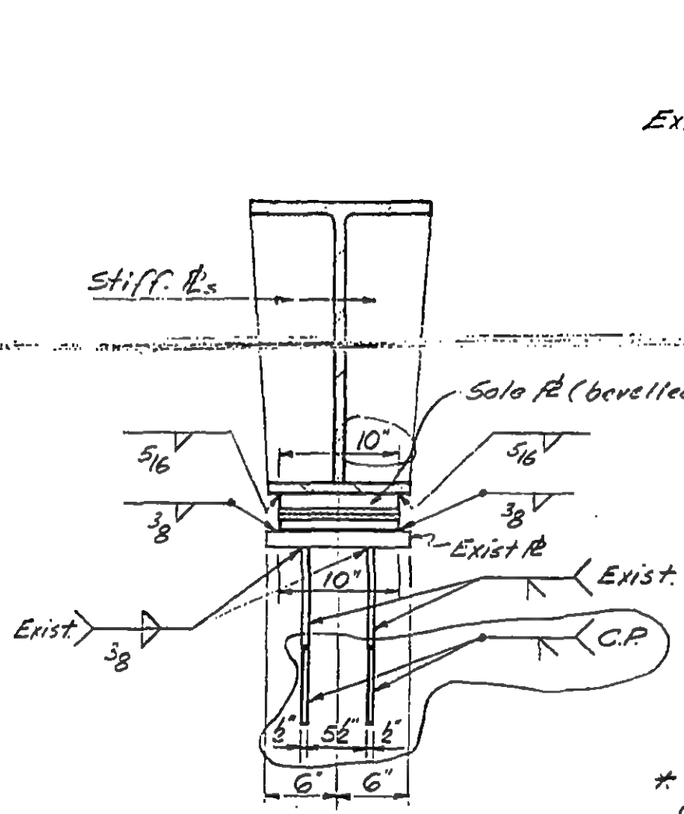

Section a-a

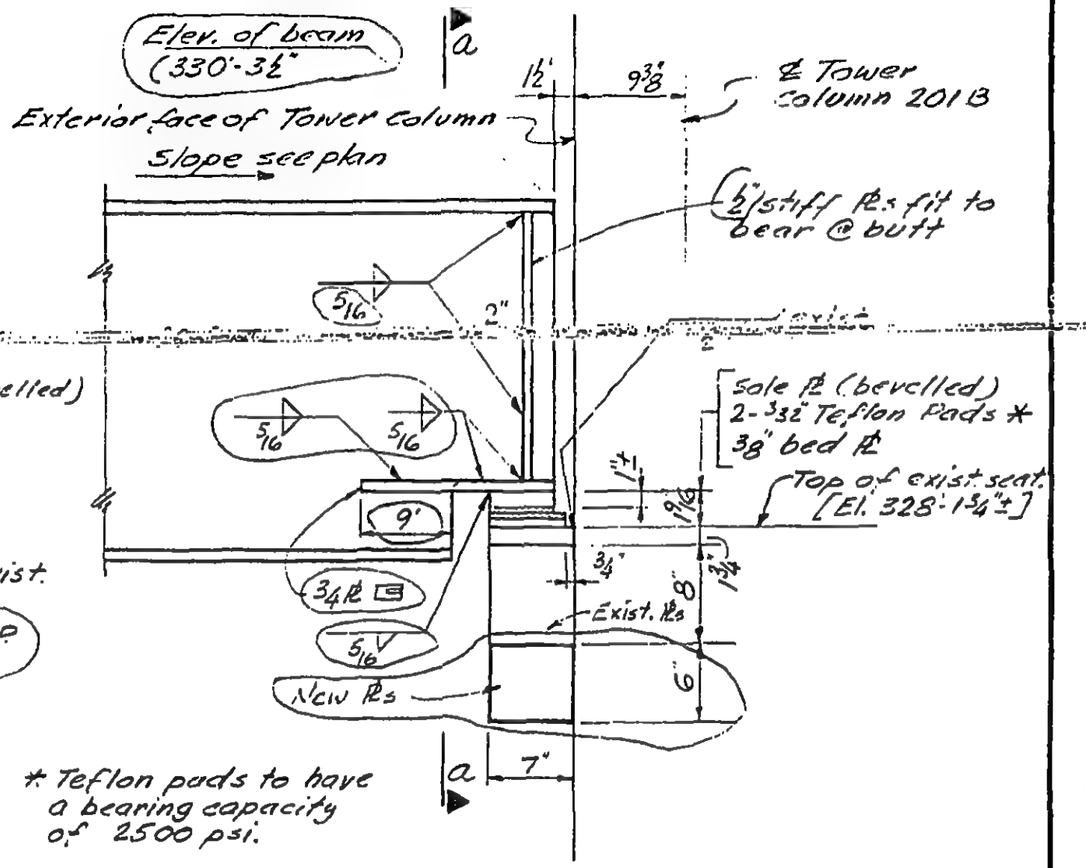

* Teflon pads to have a bearing capacity of 2500 psi.

Elevation

LICENSED PROFESSIONAL ENGINEER — LESLIE E. ROBERTSON — No 34360 — UNIVERSITY OF THE STATE OF NEW YORK

DESIGNED

DRAWN

REVIEWED

13-K6.1-3

SKILLING, HELLE, CHRISTIANSEN, ROBERTSON — Structural & Civil Engineers

PROJECT: THE WORLD TRADE CENTER | TITLE: SLIDE CONNECTIONS | DATE: 11-20-72

REVISIONS

RELEASED FOR CONSTRUCTION 11-20-72

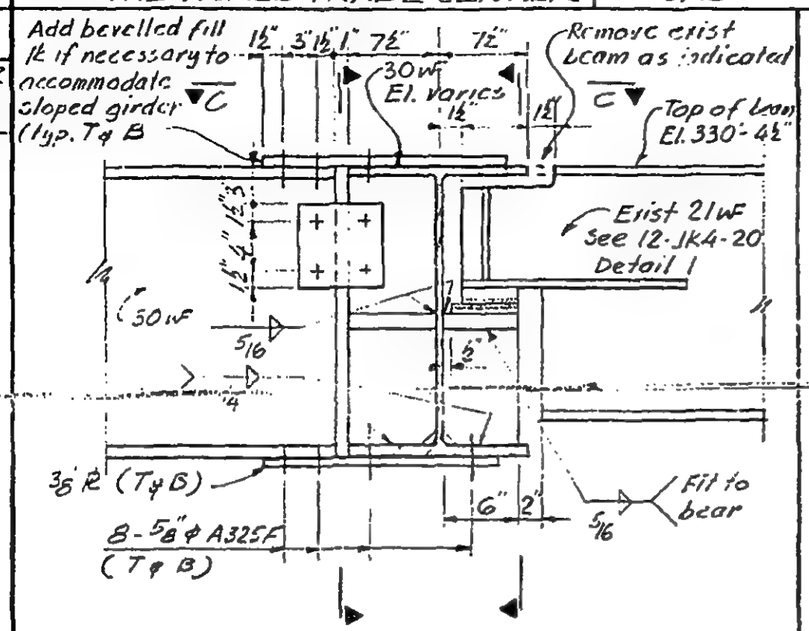

A

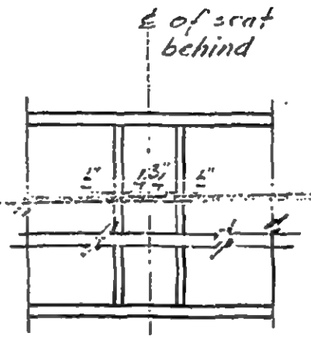

d

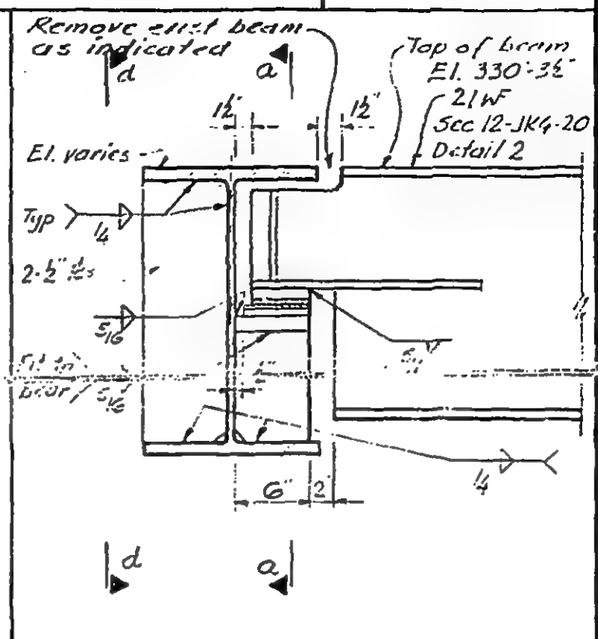

B

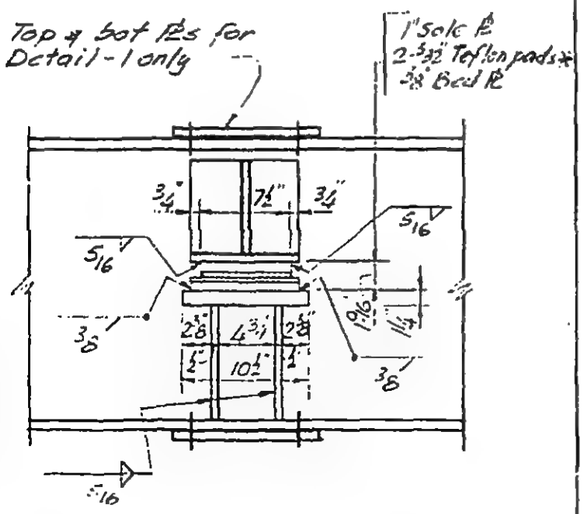

a

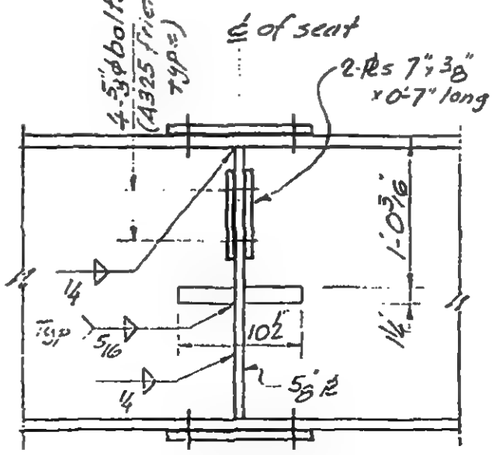

b

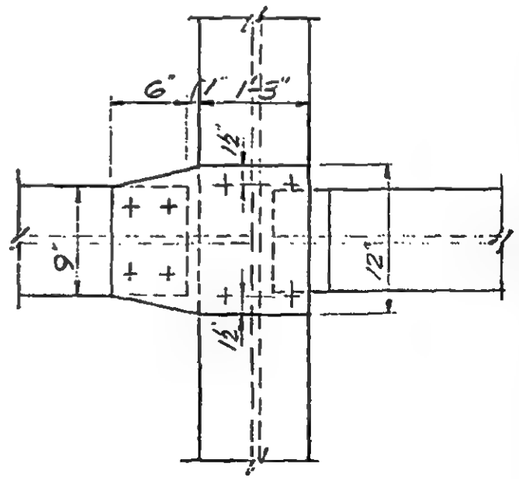

c

*Teflon pads to have a bearing capacity of 2000 psi

LICENSED PROFESSIONAL ENGINEER — LESLIE E. ROBERTSON — NO 34360 — UNIVERSITY OF THE STATE OF NEW YORK

DESIGNED

DRAWN

REVIEWED

13-KG.1-4

SKILLING, HELLE, CHRISTIANSEN, ROBERTSON — Structural & Civil Engineers

PROJECT: THE WORLD TRADE CENTER | TITLE: SLIDE CONNECTION | DATE: 4-20-73

REVISIONS

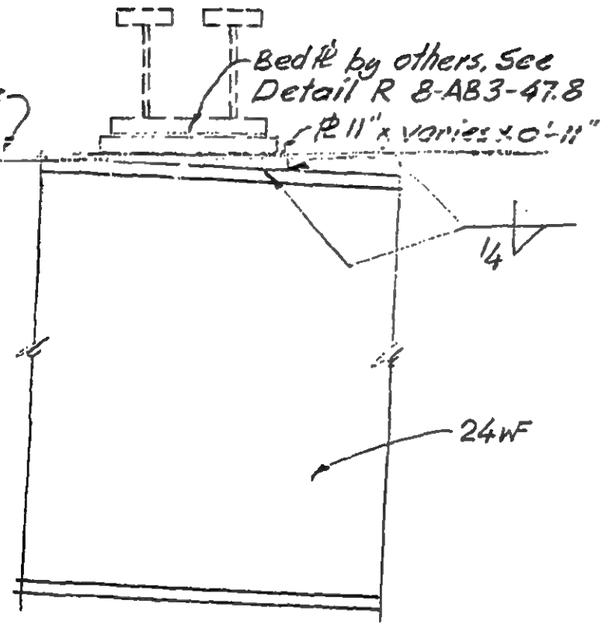

LICENSED PROFESSIONAL ENGINEER
LESLIE E. ROBERTSON
No 34360
UNIVERSITY OF THE STATE OF NEW YORK

DESIGNED

DRAWN

REVIEWED

A

13-K6.1-5

SKILLING, HELLE, CHRISTIANSEN, ROBERTSON — Structural & Civil Engineers

PROJECT: THE WORLD TRADE CENTER | TITLE: BEAM CONNECTION DETAIL AT STAIR | DATE: 11-3-72

REVISIONS

Released for construction 11-20-72

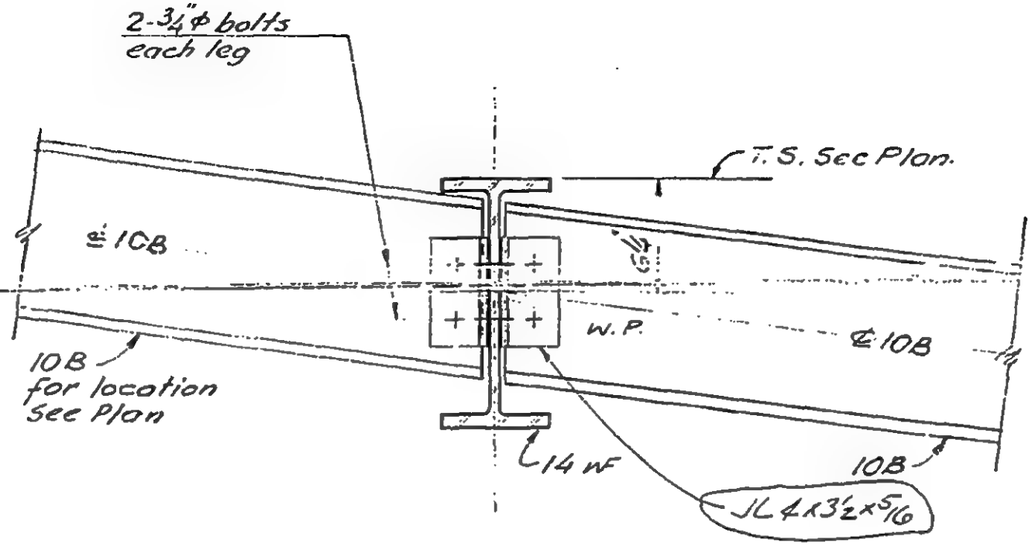

A

B

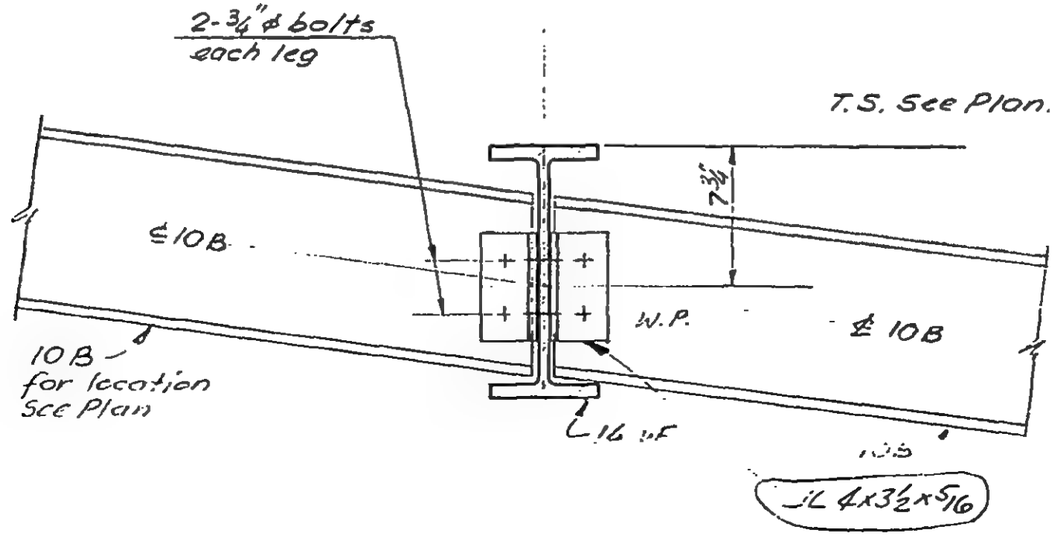

LICENSED PROFESSIONAL ENGINEER — LESLIE E. ROBERTSON — No 34360 — UNIVERSITY OF THE STATE OF NEW YORK

DESIGNED

DRAWN

REVIEWED

13-K6.2-1

SKILLING, HELLE, CHRISTIANSEN, ROBERTSON — Structural & Civil Engineers

PROJECT: THE WORLD TRADE CENTER | TITLE: DETAIL OF HANGERS AT STAIR | DATE: 11-3-72

REVISIONS

Released for construction 11-20-72

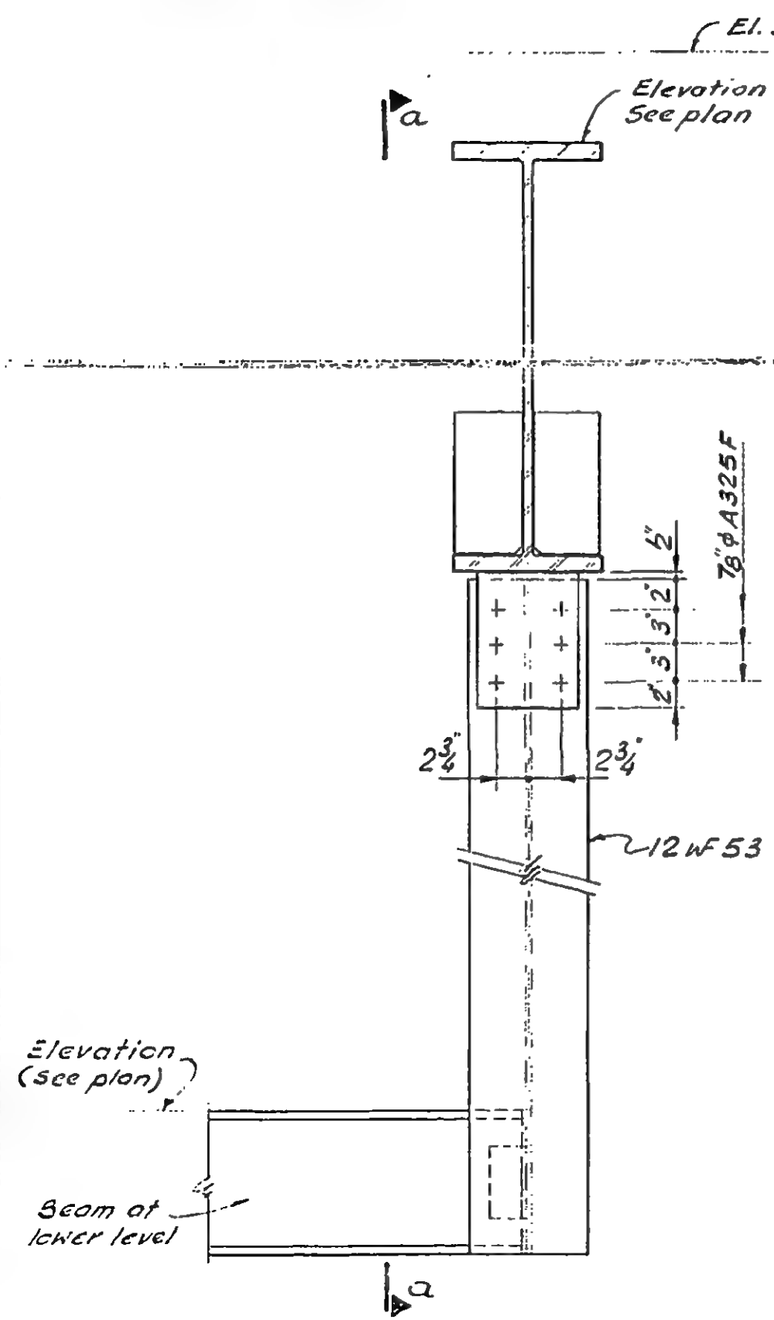

Elevation

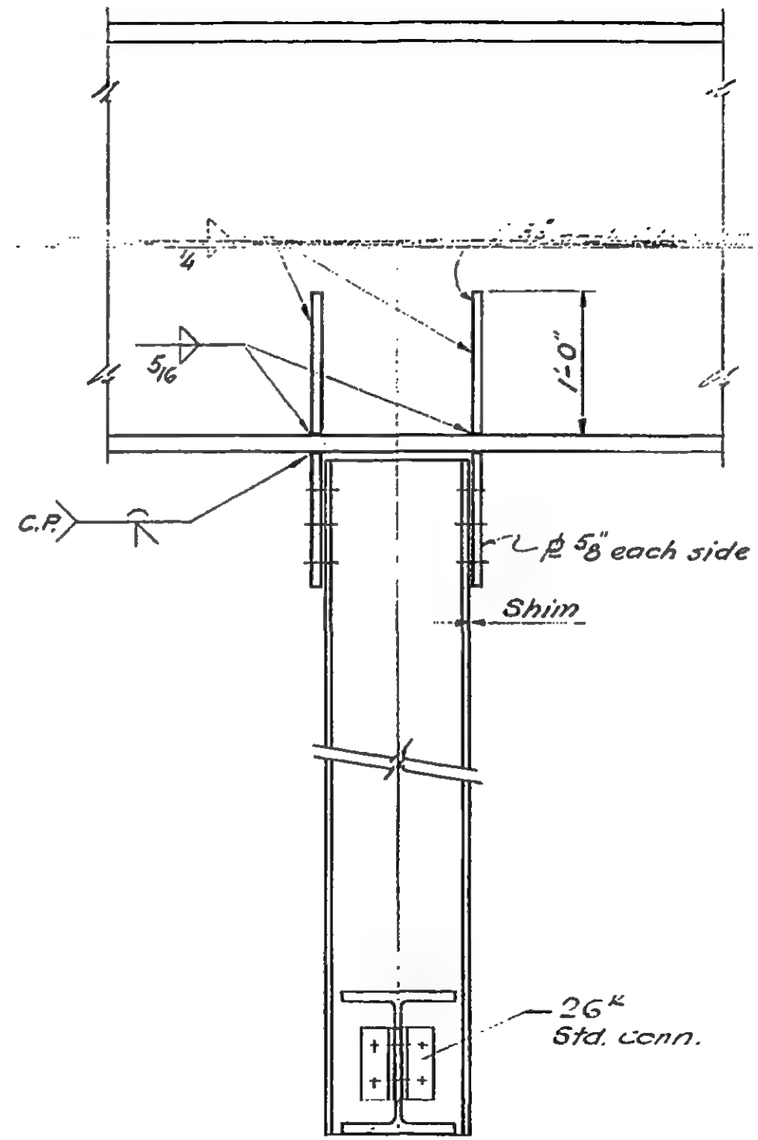

Section a-a

13-K6.2-2

LICENSED PROFESSIONAL ENGINEER
LESLIE E. ROBERTSON
No 34360
UNIVERSITY OF THE STATE OF NEW YORK

DESIGNED

DRAWN John Gricius

REVIEWED

SKILLING, HELLE, CHRISTIANSEN, ROBERTSON — Structural & Civil Engineers

PROJECT: THE WORLD TRADE CENTER | TITLE: DETAILS TO EXISTING AT STAIR | DATE: 11-3-72

REVISIONS

Delegated for construction 11-20-72

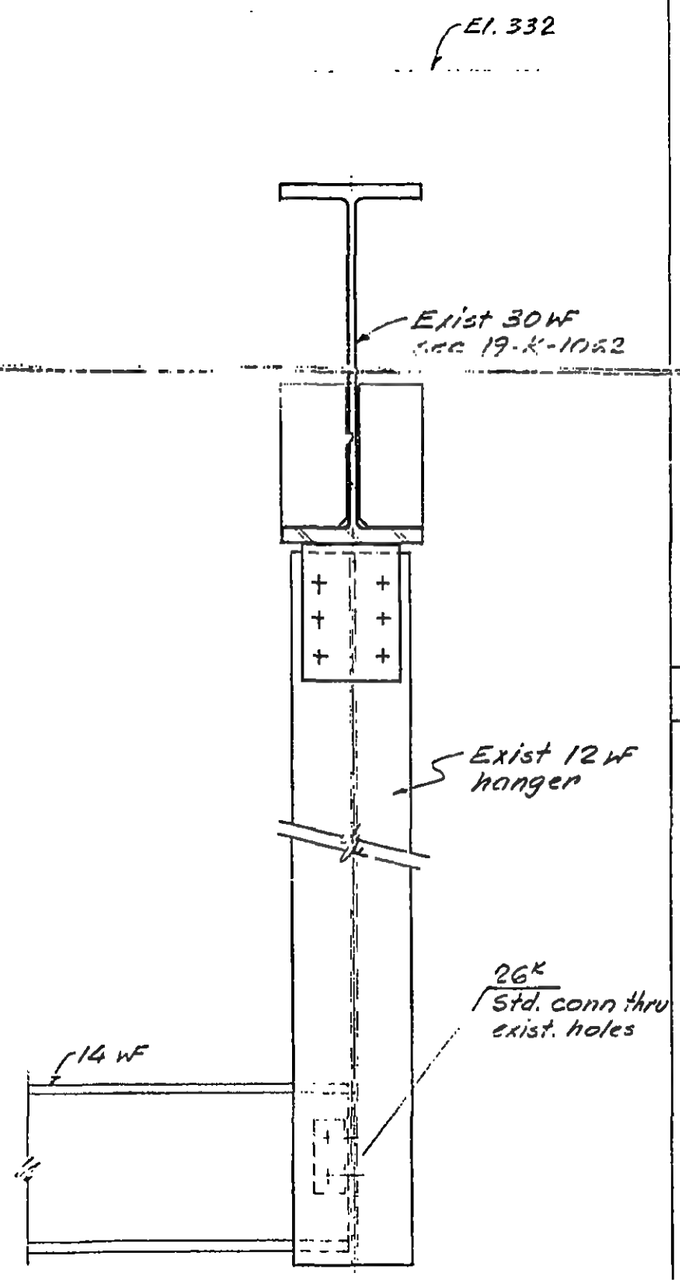

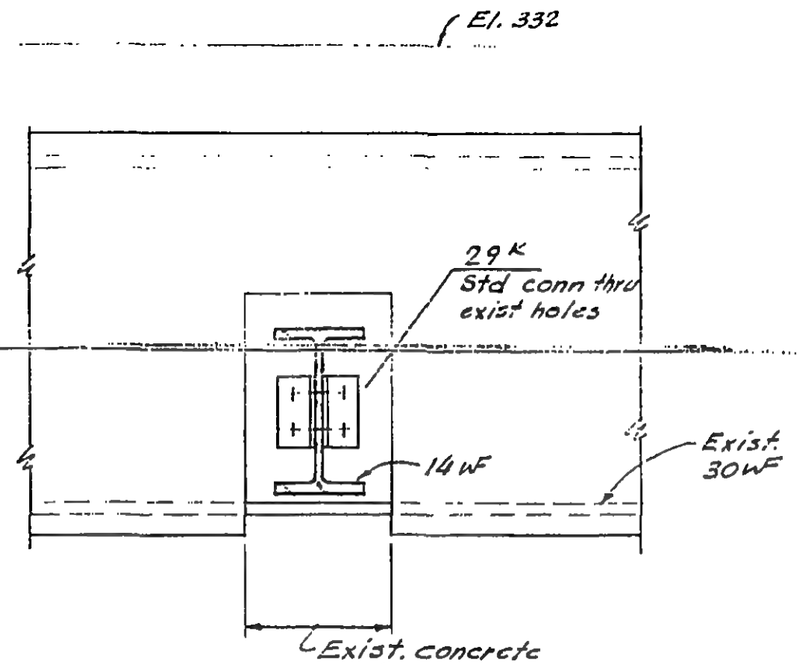

B

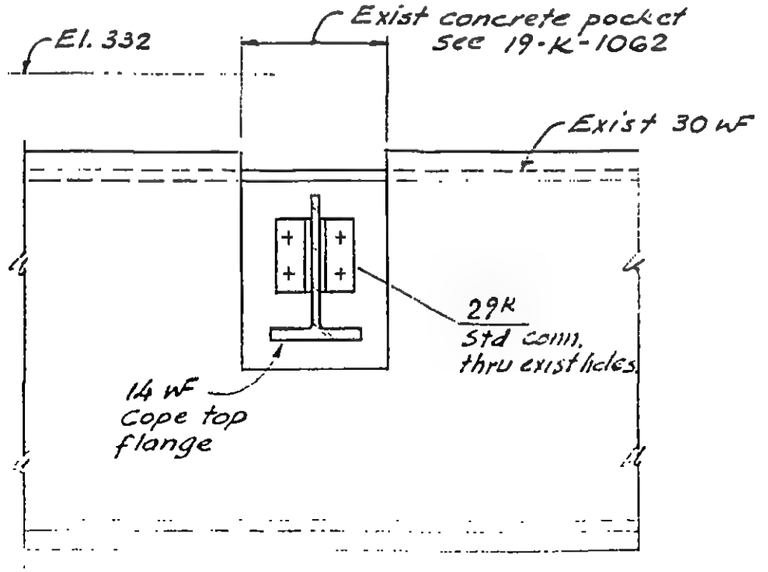

A C

13-K6.2-3

LICENSED PROFESSIONAL ENGINEER — LESLIE E. ROBERTSON — No 34360 — UNIVERSITY OF THE STATE OF NEW YORK

DESIGNED

DRAWN John Gracey

REVIEWED

SKILLING, HELLE, CHRISTIANSEN, ROBERTSON — Structural & Civil Engineers

PROJECT: THE WORLD TRADE CENTER | TITLE: DETAIL TO EXISTING AT STAIR | DATE: 11-3-72

REVISIONS

Released for construction 11-20-72

2-5-73

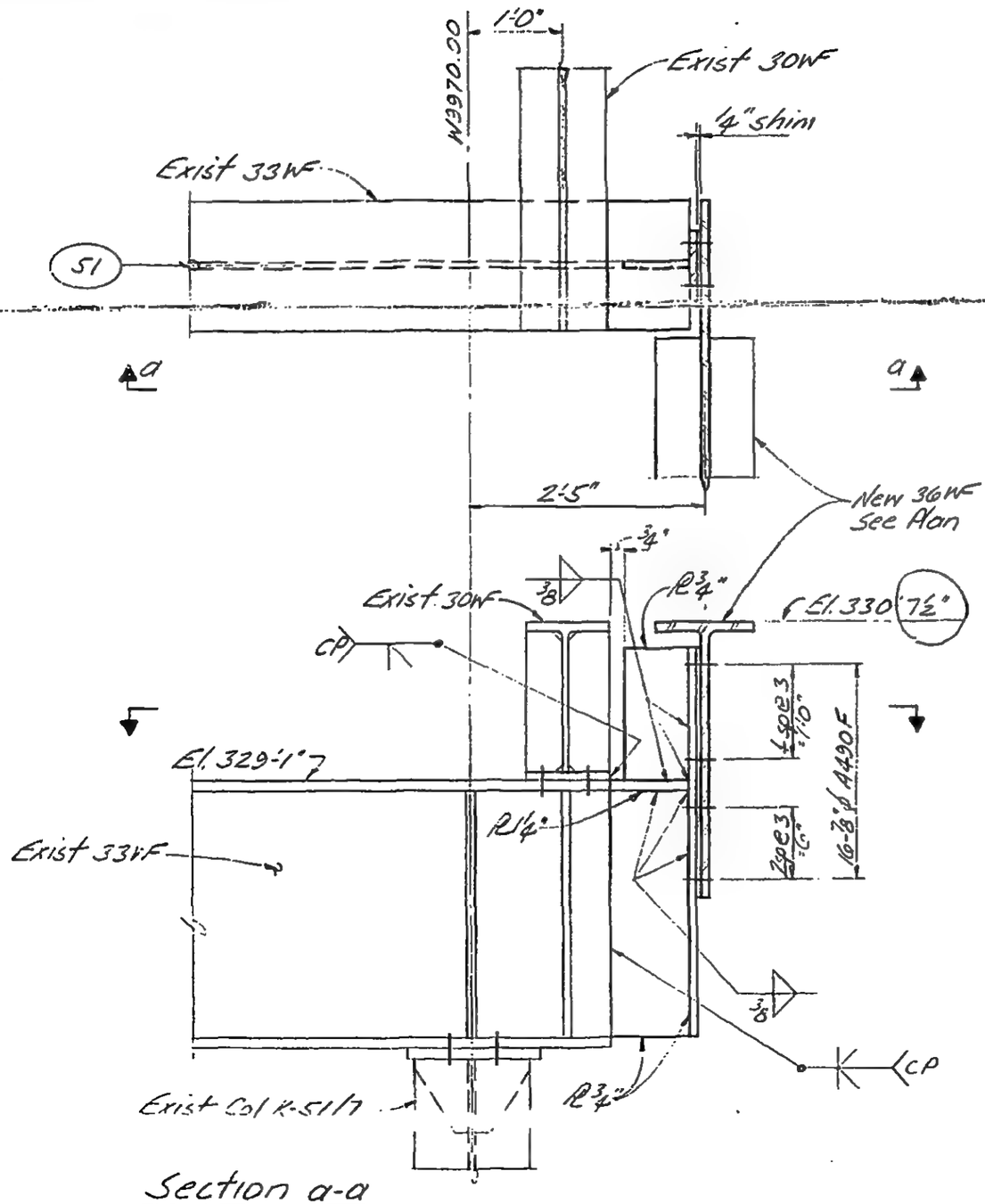

Section a-a

LICENSED PROFESSIONAL ENGINEER — LESLIE E. ROBERTSON — No 34360 — UNIVERSITY OF THE STATE OF NEW YORK

DESIGNED

DRAWN

REVIEWED

13-KG.2-4

SKILLING, HELLE, CHRISTIANSEN, ROBERTSON — Structural & Civil Engineers

PROJECT: THE WORLD TRADE CENTER

TITLE: BEAM CONNECTIONS AT EXISTING

DATE: 11-3-72

REVISIONS

Release for construction 11-20-72

2-5-73

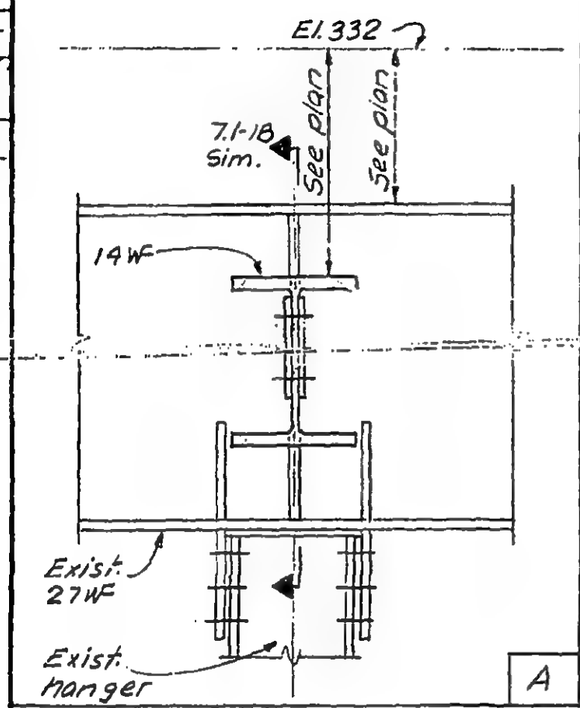

A

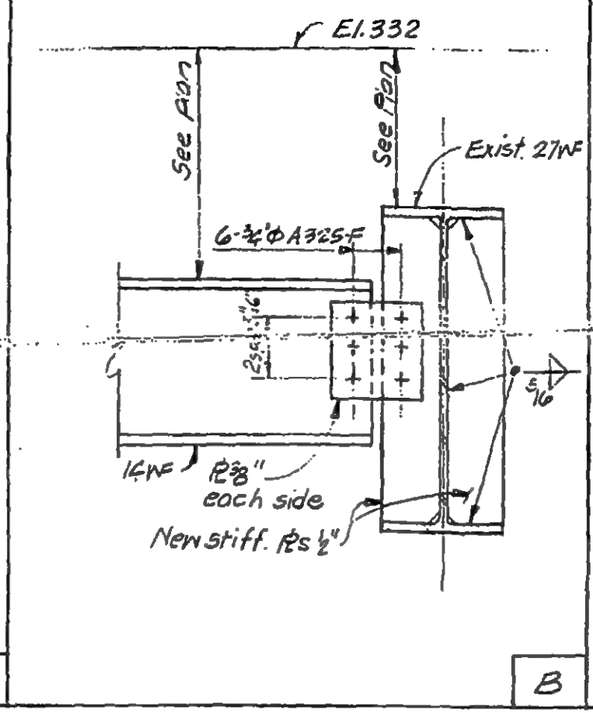

B

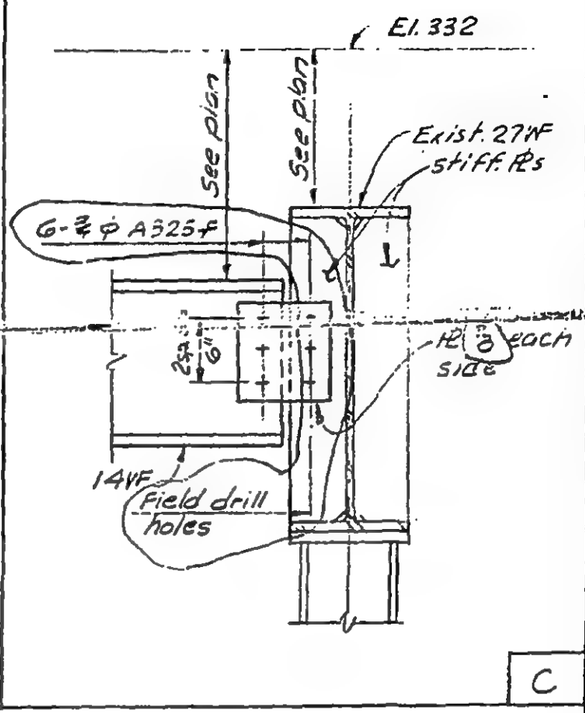

C

13-K7.1-1

LICENSED PROFESSIONAL ENGINEER
LESLIE E. ROBERTSON
No 34360
UNIVERSITY OF THE STATE OF NEW YORK

DESIGNED

DRAWN A.L. Frangui

REVIEWED

SKILLING, HELLE, CHRISTIANSEN, ROBERTSON — Structural & Civil Engineers

PROJECT THE WORLD TRADE CENTER | TITLE BEAM END NOTCHES & CONNECTIONS | DATE 11-3-72

REVISIONS

Released for construction 11-20-72

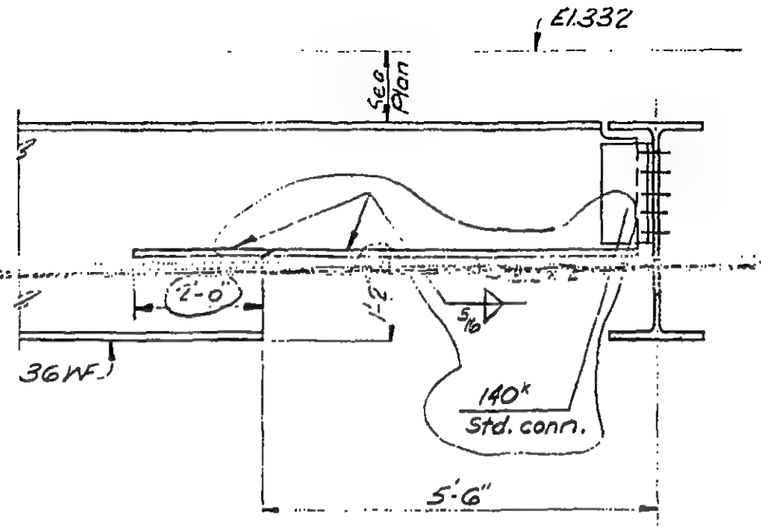

A

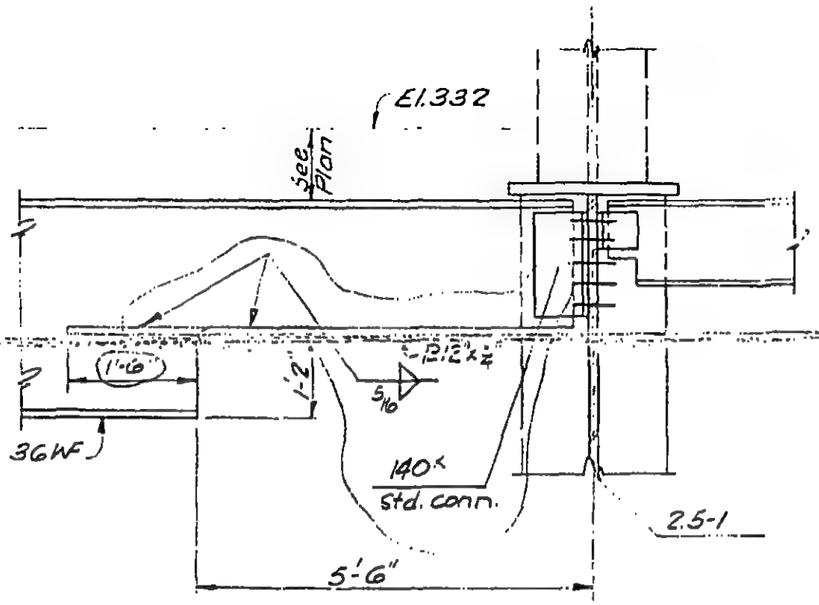

B

LICENSED PROFESSIONAL ENGINEER
LESLIE E. ROBERTSON
No 34360
UNIVERSITY OF THE STATE OF NEW YORK

DESIGNED WAD

DRAWN TR

REVIEWED

13-K 7.2-1

SKILLING, HELLE, CHRISTIANSEN, ROBERTSON — Structural & Civil Engineers

PROJECT THE WORLD TRADE CENTER | TITLE BEAM NOTCH IN EXISTING BEAM | DATE 11-3-72

REVISIONS

Released for construction 11-20-72

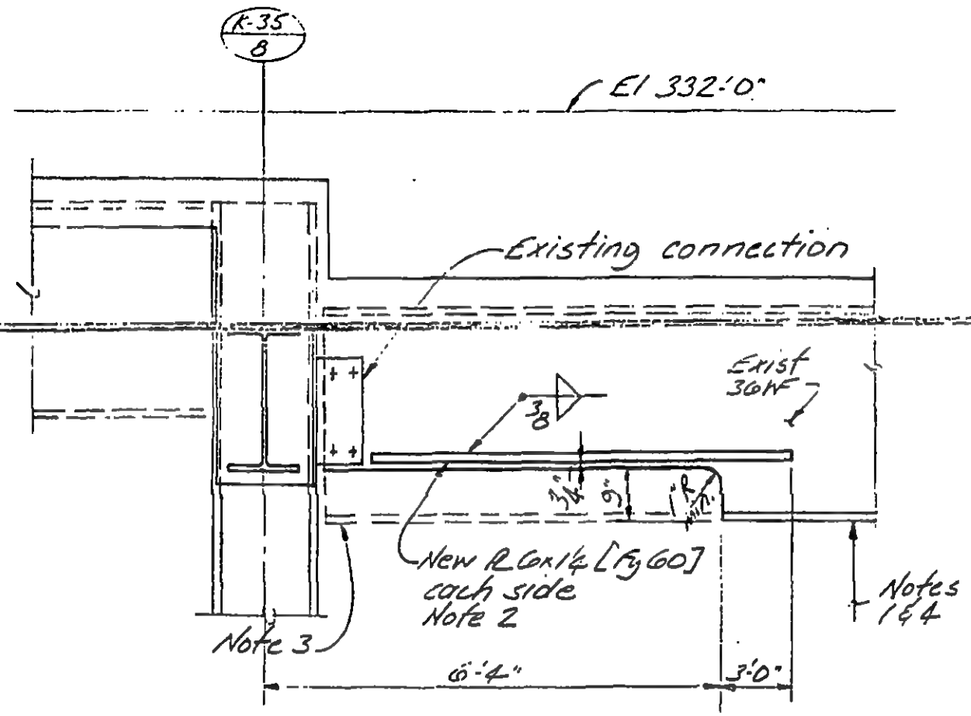

Section A-A

Proceedure

1. Shore
2. Install new RCs
3. Remove portion of beam indicated
4. Remove shore

LICENSED PROFESSIONAL ENGINEER LESLIE E. ROBERTSON No 34360 UNIVERSITY OF THE STATE OF NEW YORK

DESIGNED

DRAWN

REVIEWED

A

13K7.3-1

SKILLING, HELLE, CHRISTIANSEN, ROBERTSON — Structural & Civil Engineers

PROJECT: THE WORLD TRADE CENTER | TITLE: HANGER DETAILS ABOVE MECHANICAL PLATFORM | DATE: 11-3-72

REVISIONS

Released for construction 11-24-72

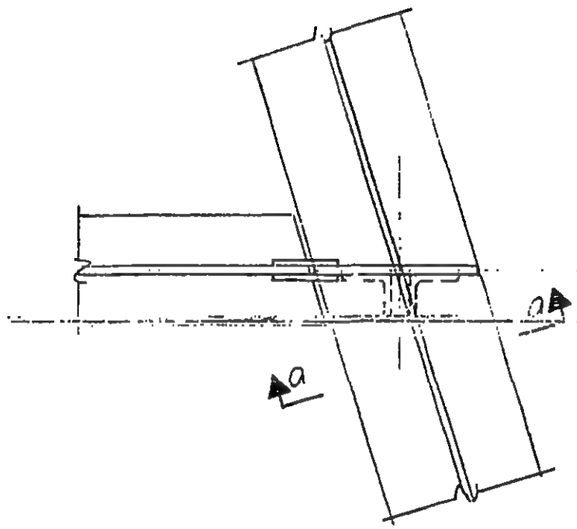

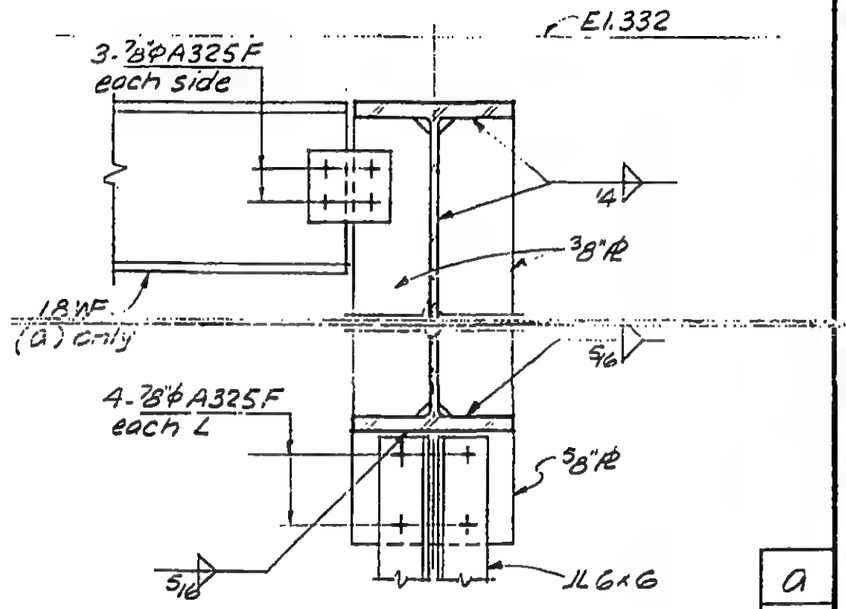

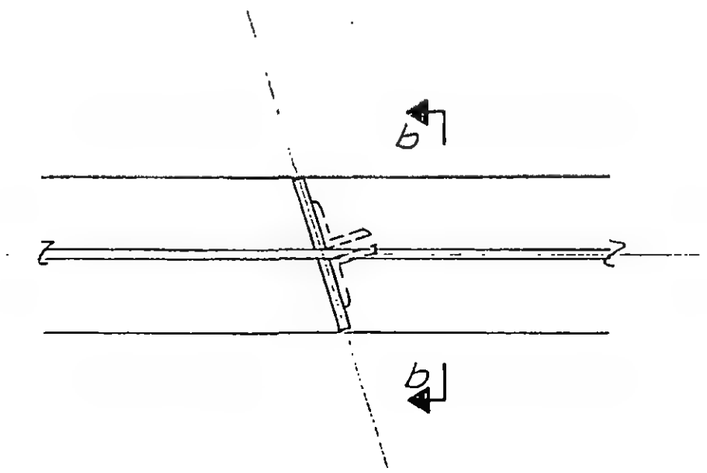

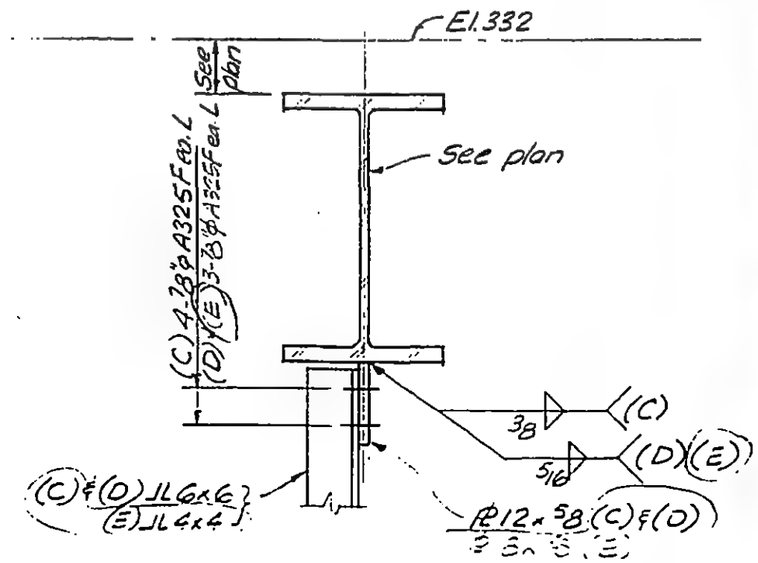

LICENSED PROFESSIONAL ENGINEER — LESLIE E. ROBERTSON — No 34360 — UNIVERSITY OF THE STATE OF NEW YORK

DESIGNED

SKILLING, HELLE, CHRISTIANSEN, ROBERTSON — Structural & Civil Engineers

PROJECT: THE WORLD TRADE CENTER | TITLE: HANGER DETAILS ABOVE MECHANICAL PLATFORM | DATE: 11-3-72

REVISIONS

Released for construction 11-24-72

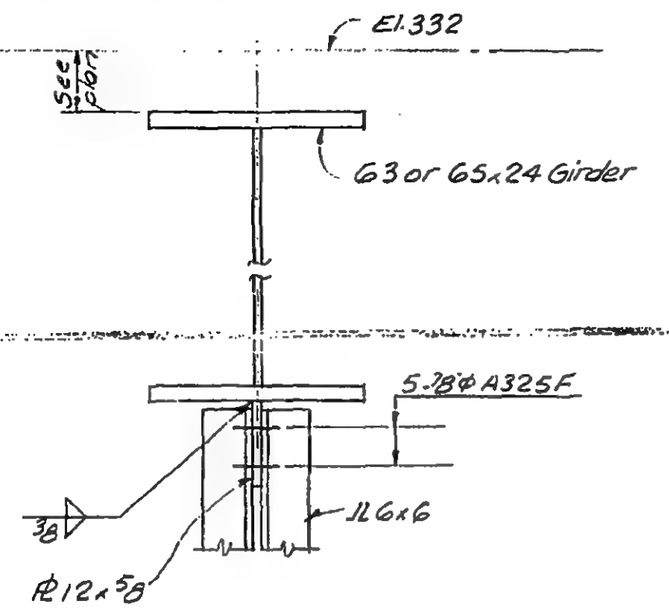

A

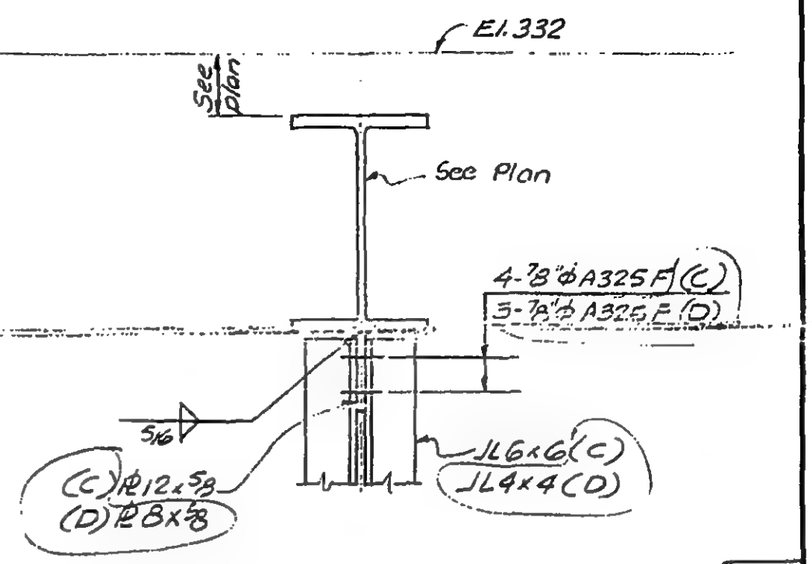

C (D)

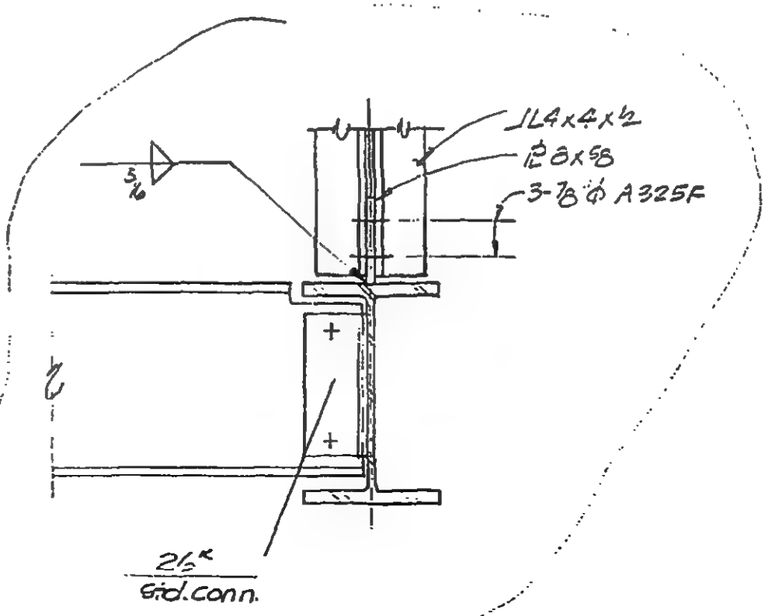

E

13-K8.1-2

LICENSED PROFESSIONAL ENGINEER
LESLIE E. ROBERTSON
No 34360
UNIVERSITY OF THE STATE OF NEW YORK

DESIGNED

DRAWN A.L. Franqui

REVIEWED

SKILLING, HELLE, CHRISTIANSEN, ROBERTSON — Structural & Civil Engineers

PROJECT THE WORLD TRADE CENTER | TITLE HANGER DETAILS ABOVE MECHANICAL PLATFORM | DATE 4-20-73

REVISIONS

6-1-73

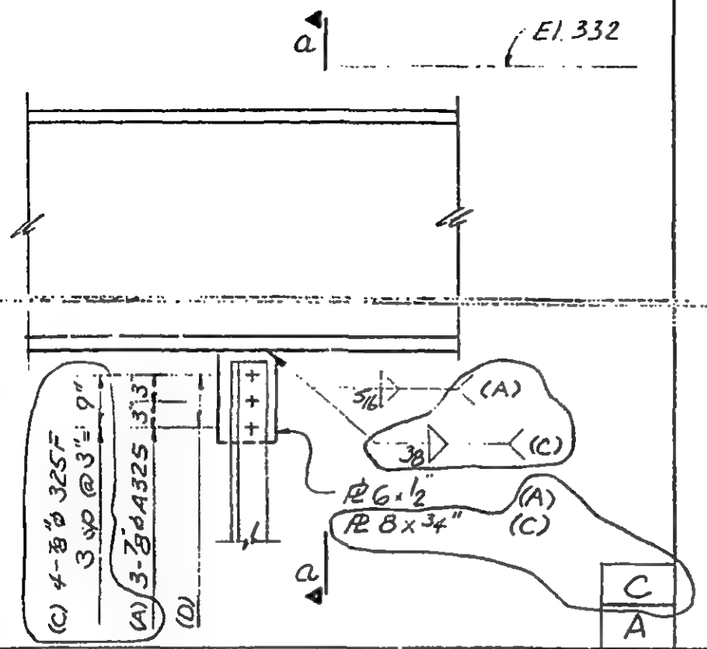

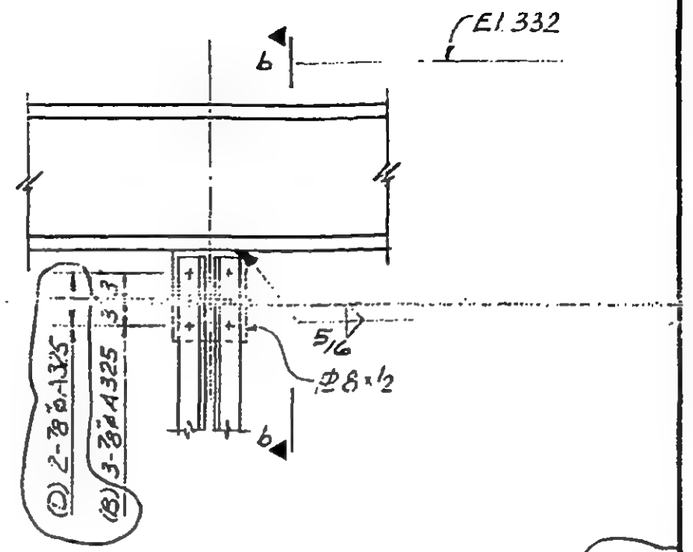

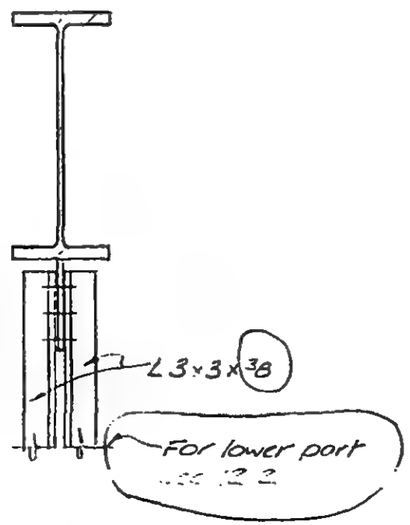

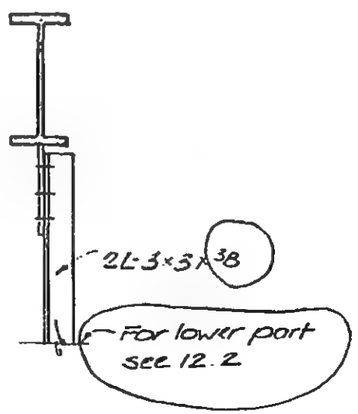

a | b

13-K8.1-3

LICENSED PROFESSIONAL ENGINEER
LESLIE E. ROBERTSON
No 34360
UNIVERSITY OF THE STATE OF NEW YORK

DESIGNED

DRAWN John G. Hickey

REVIEWED

SKILLING, HELLE, CHRISTIANSEN, ROBERTSON — Structural & Civil Engineers

PROJECT: THE WORLD TRADE CENTER | TITLE: HANGER DETAILS ABOVE MECHANICAL PLATFORM | DATE: 11-3-72

REVISIONS

Released for construction 11-24-72

2-5-73

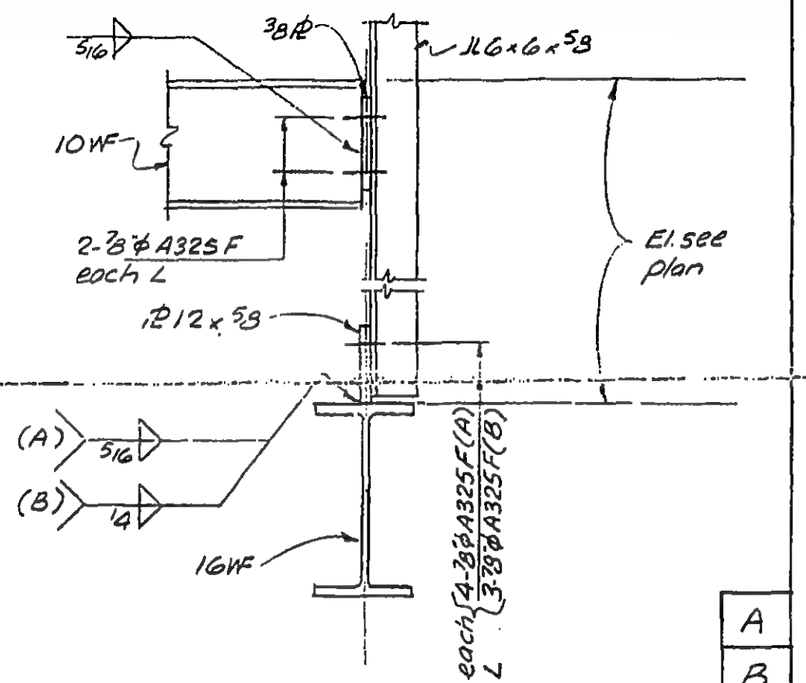

A

B

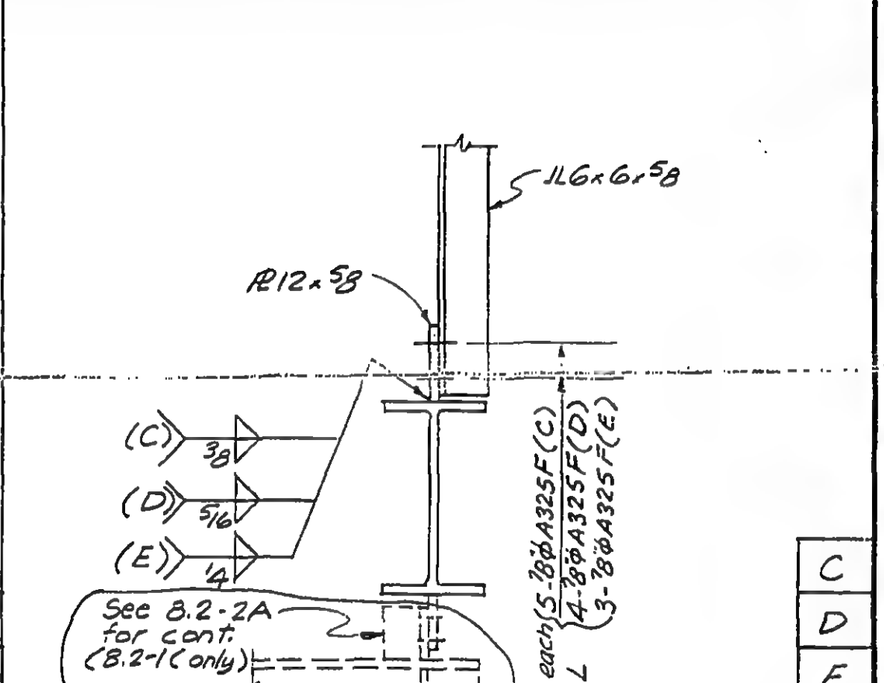

C

D

E

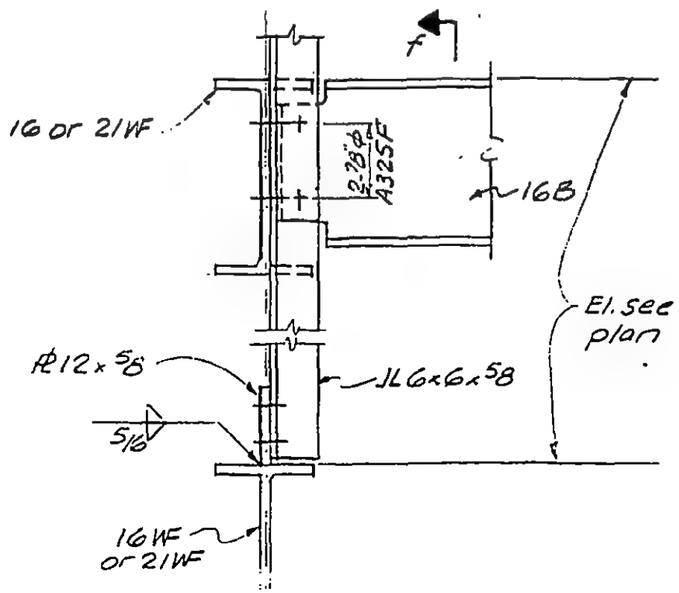

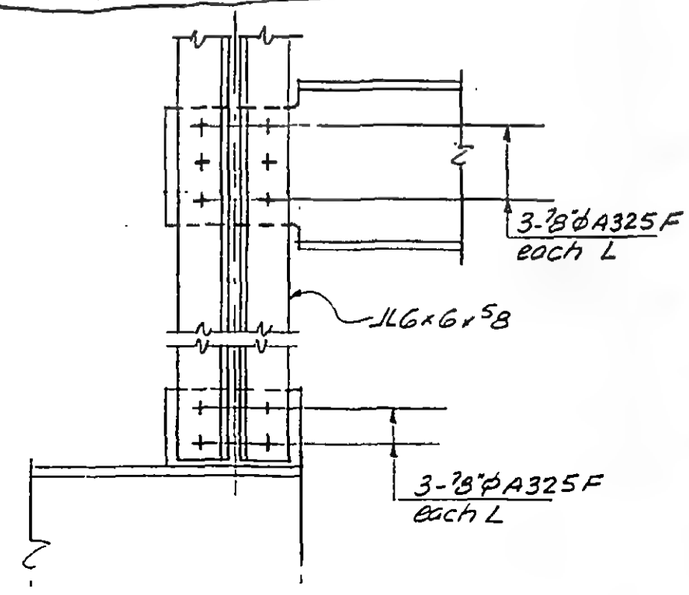

LICENSED PROFESSIONAL ENGINEER — LESLIE E. ROBERTSON — No 34360 — UNIVERSITY OF THE STATE OF NEW YORK

DESIGNED

SKILLING, HELLE, CHRISTIANSEN, ROBERTSON — Structural & Civil Engineers

PROJECT: THE WORLD TRADE CENTER | TITLE: CONNECTION DETAIL - EL. 310 MECH. PLATFORM | DATE: 2-5-73

REVISIONS

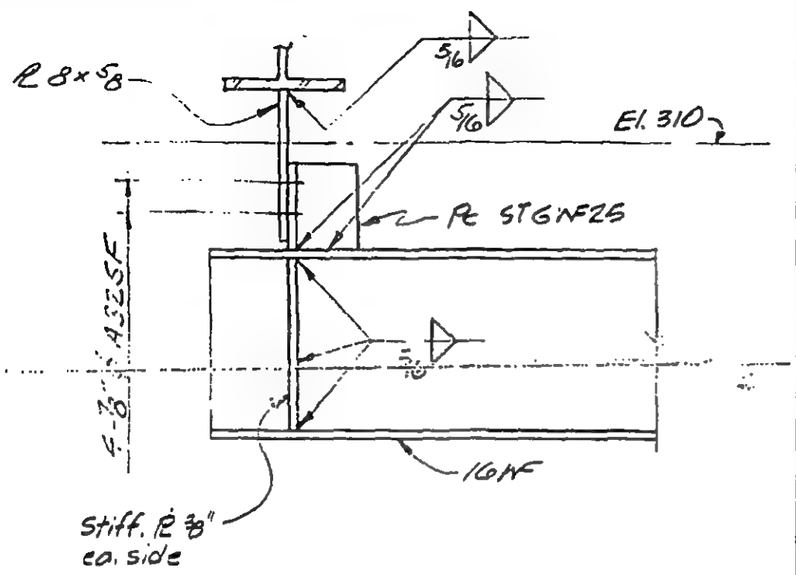

A

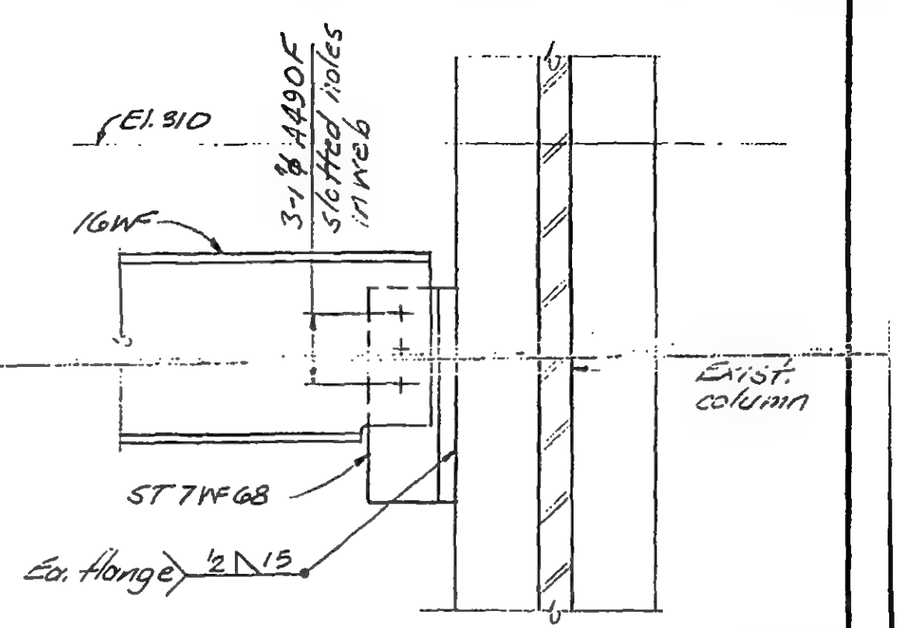

B

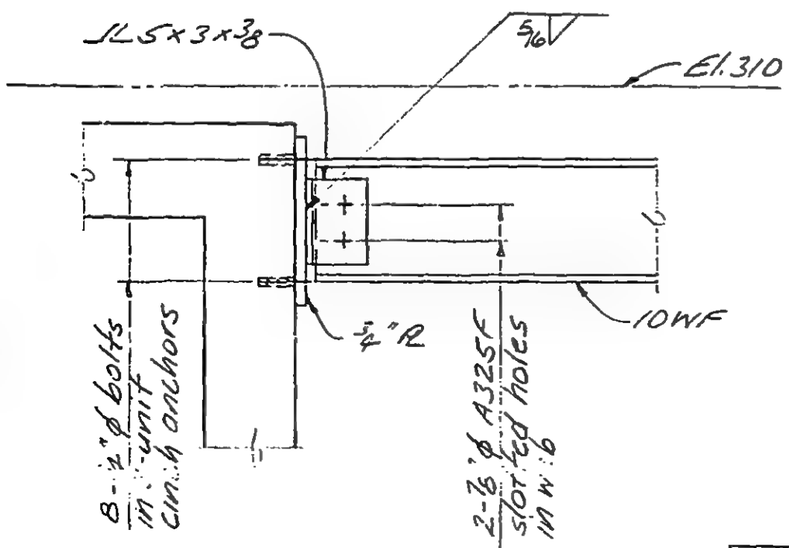

C

LICENSED PROFESSIONAL ENGINEER LESLIE E. ROBERTSON NO 34380 UNIVERSITY OF THE STATE OF NEW YORK

DESIGNED

DRAWN

REVIEWED

13-K8.2-2

SKILLING, HELLE, CHRISTIANSEN, ROBERTSON — Structural & Civil Engineers

PROJECT: THE WORLD TRADE CENTER | TITLE: CONNECTION DETAILS - INTERMEDIATE LEVEL | DATE: 11-3-72

REVISIONS

Released for construction 11-24-72

2-5-73

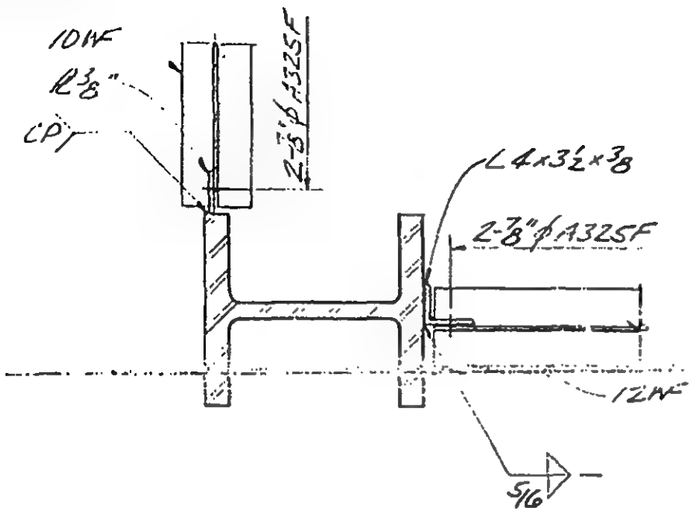

A

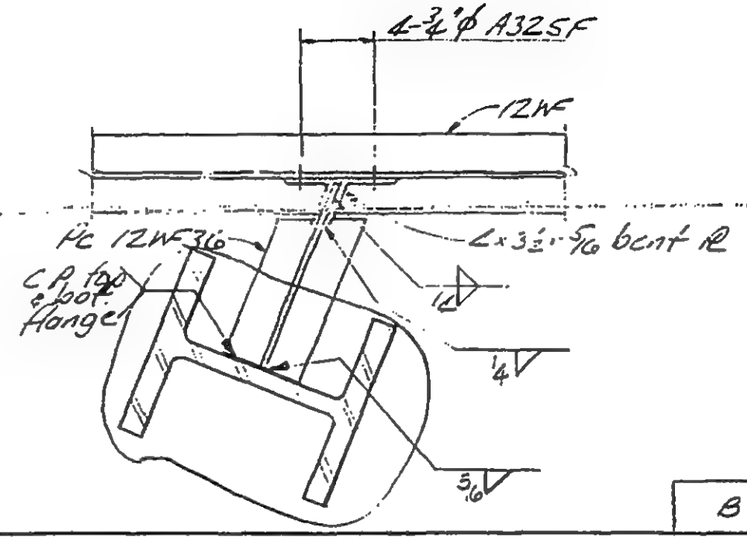

B

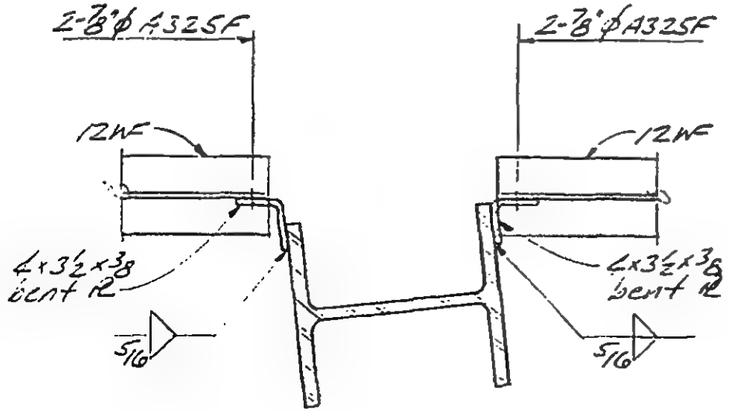

C

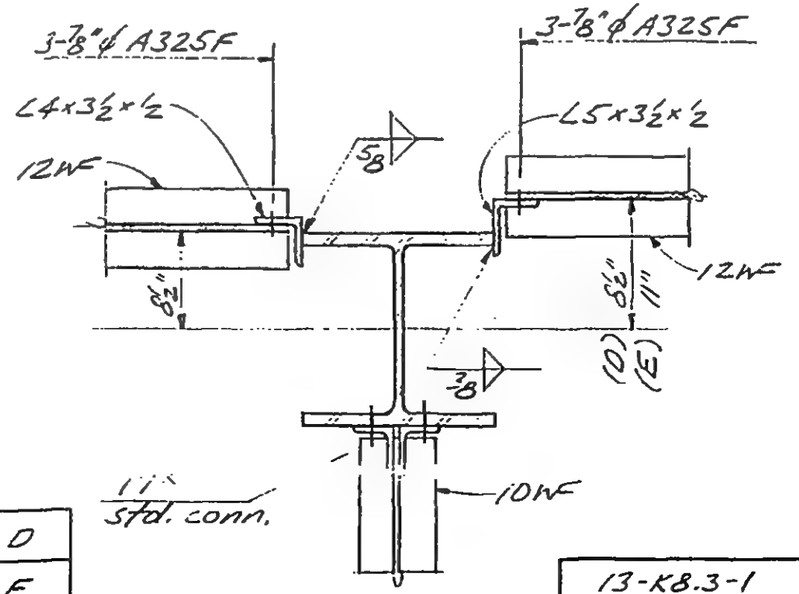

D

E

13-K8.3-1

LICENSED PROFESSIONAL ENGINEER
LESLIE E. ROBERTSON
No 34360
UNIVERSITY OF THE STATE OF NEW YORK

DESIGNED

DRAWN

REVIEWED

SKILLING, HELLE, CHRISTIANSEN, ROBERTSON — Structural & Civil Engineers

PROJECT: THE WORLD TRADE CENTER | TITLE: CONNECTION DETAILS INTERMEDIATE LEVEL | DATE: 11-3-72

REVISIONS

Released for Construction 11-24-72

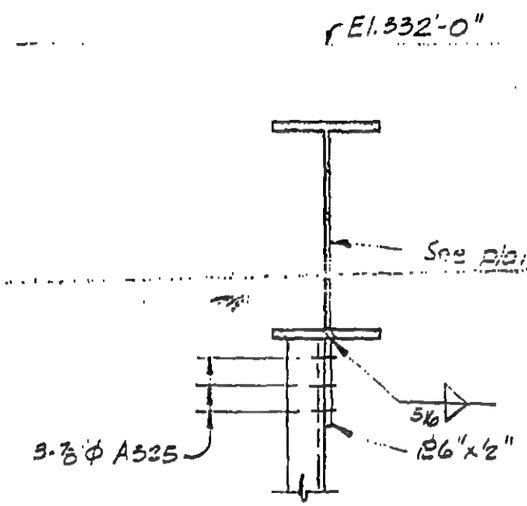

A

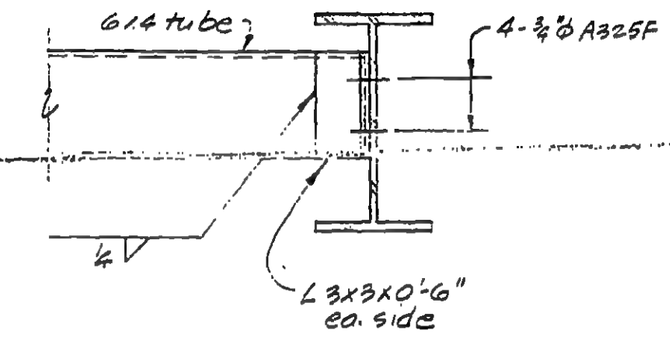

C

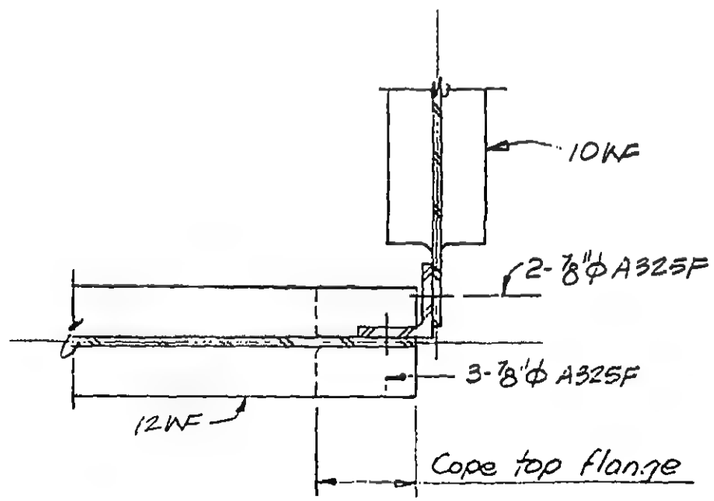

B

13-K8.3-2

LICENSED PROFESSIONAL ENGINEER — LESLIE E. ROBERTSON — No 34360 — UNIVERSITY OF THE STATE OF NEW YORK

DESIGNED

DRAWN

REVIEWED

SKILLING, HELLE, CHRISTIANSEN, ROBERTSON — Structural & Civil Engineers

PROJECT THE WORLD TRADE CENTER | TITLE INTERMEDIATE LEVEL DETAILS | DATE 11-24-72

REVISIONS

Released for construction 11-24-72

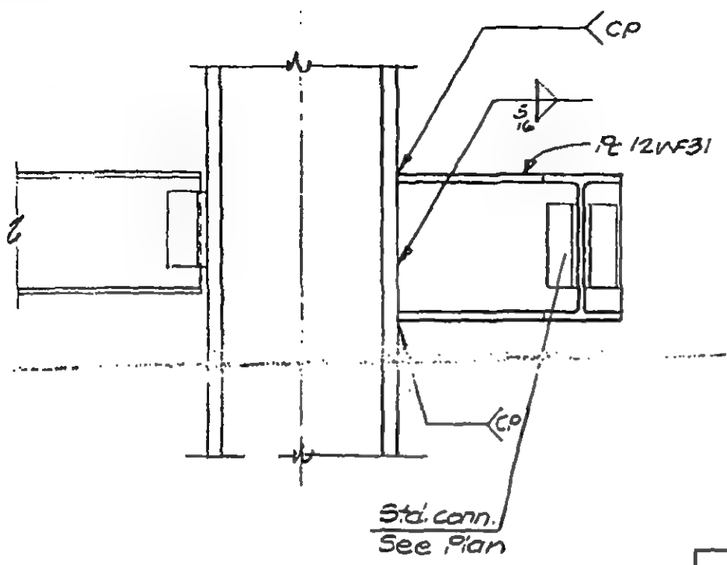

A

LICENSED PROFESSIONAL ENGINEER
LESLIE E. ROBERTSON
No 34360
UNIVERSITY OF THE STATE OF NEW YORK

DESIGNED

DRAWN

REVIEWED

13-K8.3-3

SKILLING, HELLE, CHRISTIANSEN, ROBERTSON — Structural & Civil Engineers

PROJECT THE WORLD TRADE CENTER | TITLE BRACING 310-332 ELEVATIONS | DATE 11-3-72

REVISIONS

Released for construction 11-20-72

12-11-72

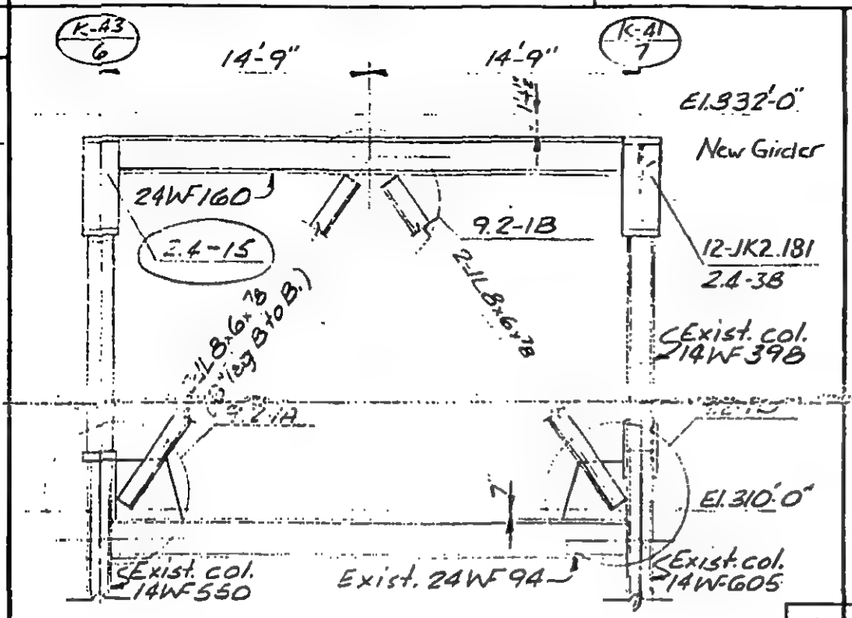

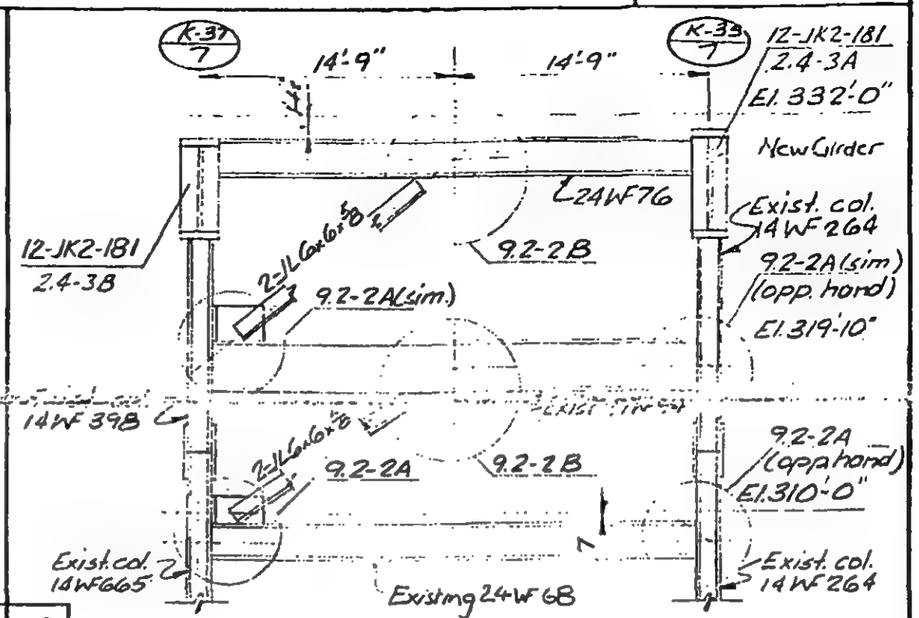

A	B
C	D

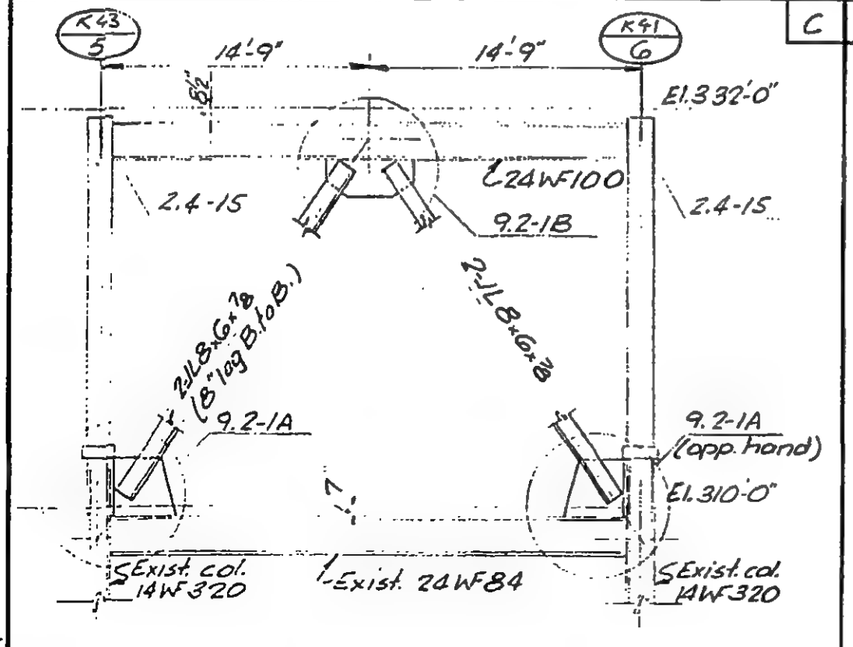

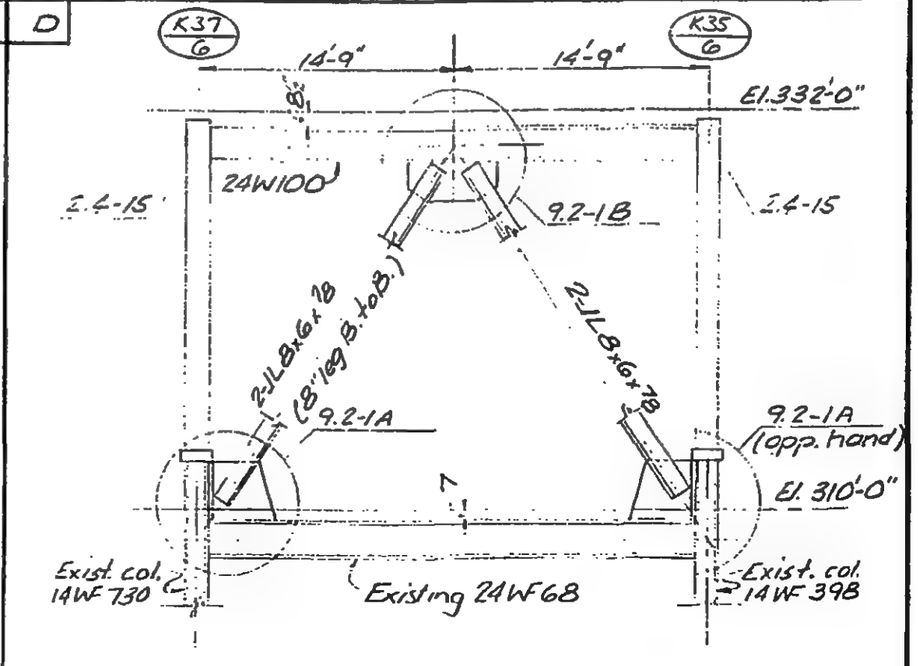

LICENSED PROFESSIONAL ENGINEER — LESLIE E. ROBERTSON — No 34360 — UNIVERSITY OF THE STATE OF NEW YORK

DESIGNED

DRAWN J Banks

REVIEWED

13-K9.1-1

SKILLING, HELLE, CHRISTIANSEN, ROBERTSON — Structural & Civil Engineers

PROJECT THE WORLD TRADE CENTER | TITLE BRACING 310-332 ELEVATIONS | DATE 11-3-72

REVISIONS

Released for construction 11-30-72

4-20-73

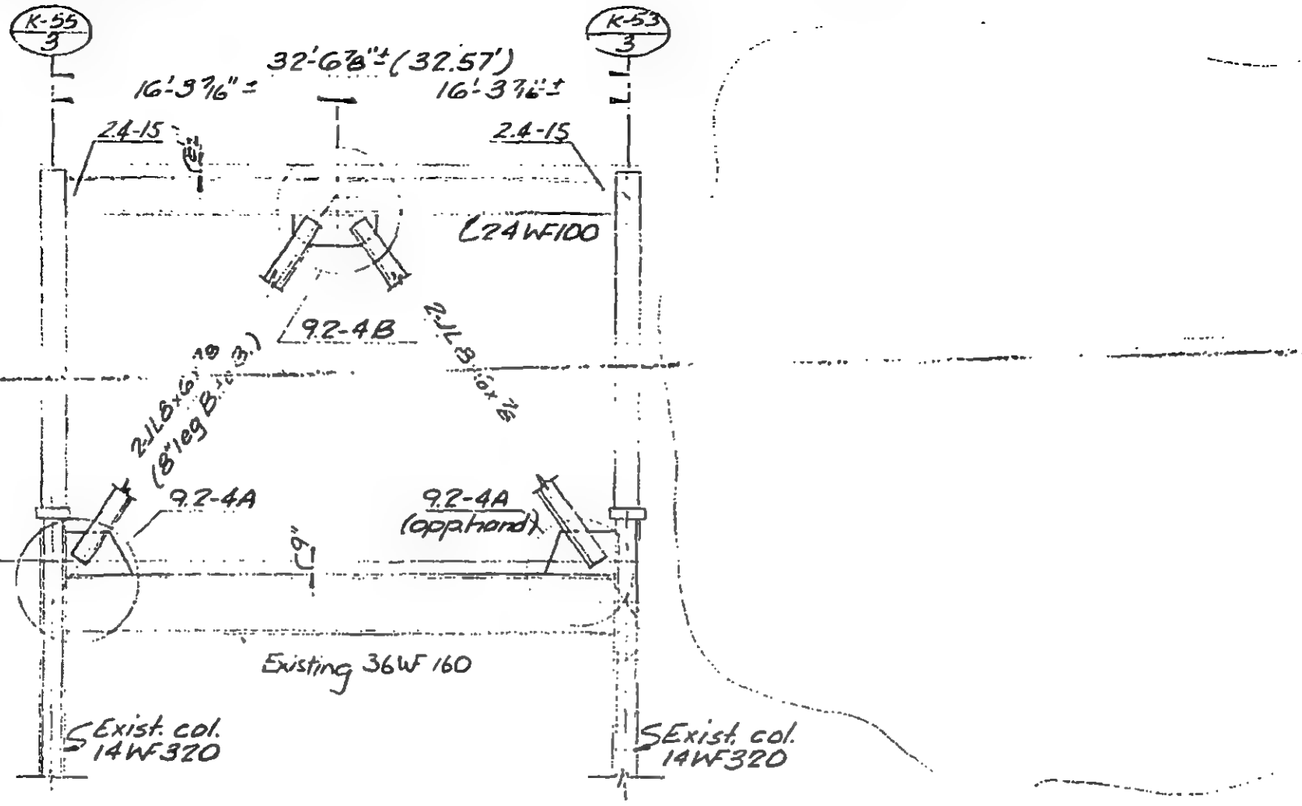

LICENSED PROFESSIONAL ENGINEER — LESLIE E. ROBERTSON — No 34360 — UNIVERSITY OF THE STATE OF NEW YORK

DESIGNED

DRAWN J Banks

REVIEWED

13-K9.1-2

SKILLING, HELLE, CHRISTIANSEN, ROBERTSON — Structural & Civil Engineers

PROJECT THE WORLD TRADE CENTER | TITLE BRACING 310-332 DETAILS | DATE 11-3-72

REVISIONS

Released for construction 11-20-72

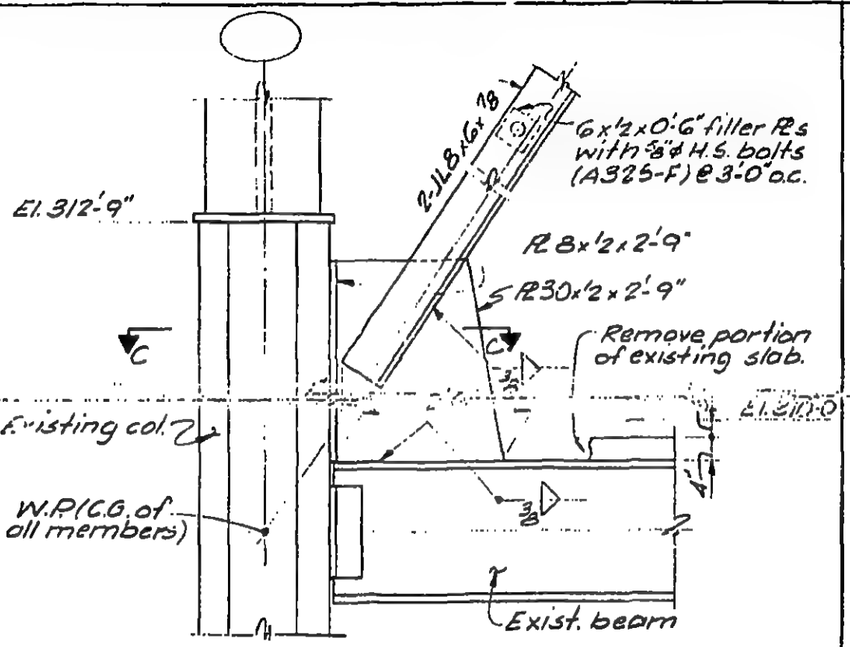

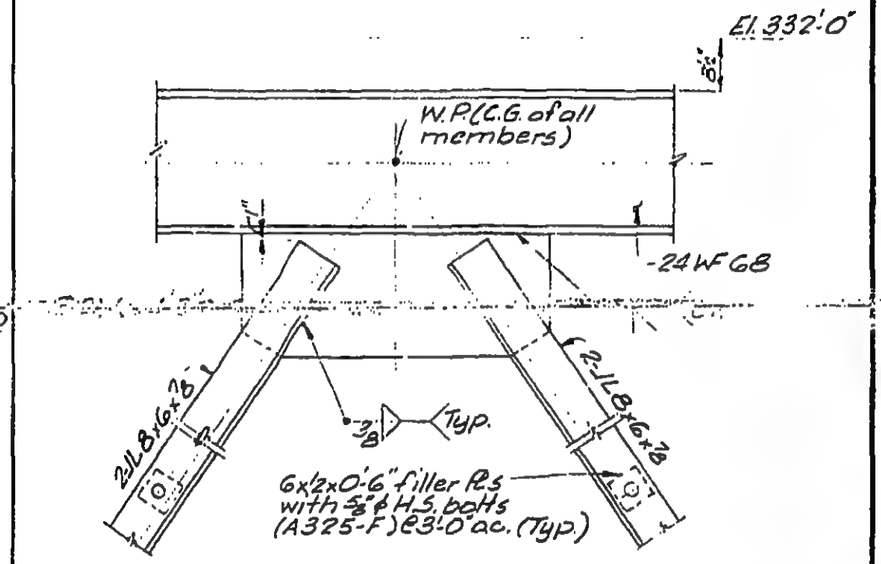

A	B
C	D

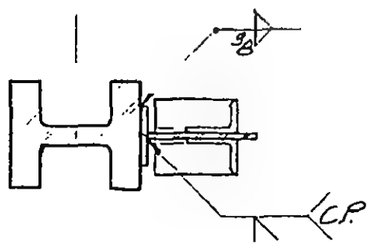

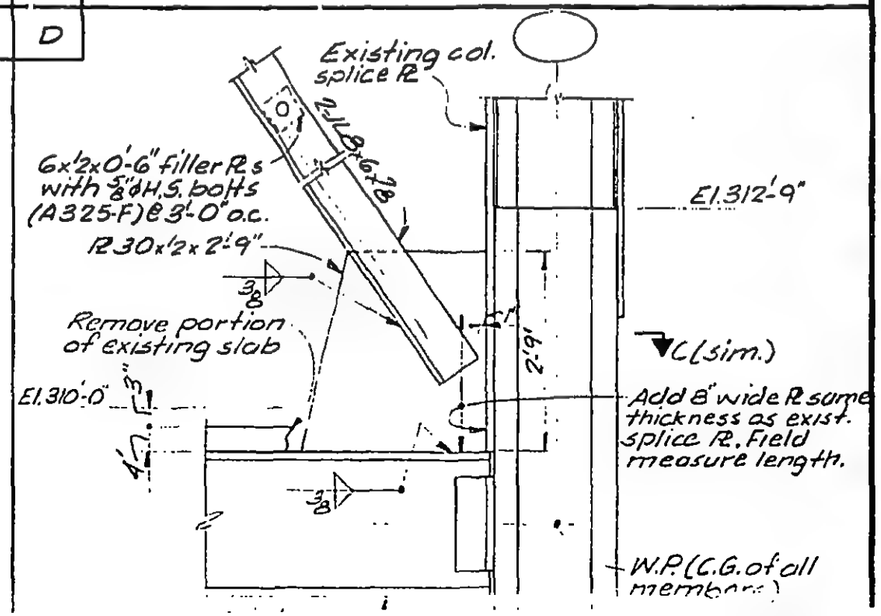

LICENSED PROFESSIONAL ENGINEER
LESLIE E. ROBERTSON
No 34360
UNIVERSITY OF THE STATE OF NEW YORK

DESIGNED

SKILLING, HELLE, CHRISTIANSEN, ROBERTSON — Structural & Civil Engineers

PROJECT THE WORLD TRADE CENTER | TITLE BRACING 310-332 DETAILS | DATE 11-3-72

REVISIONS

Released for construction 11-20-72

4-20-73

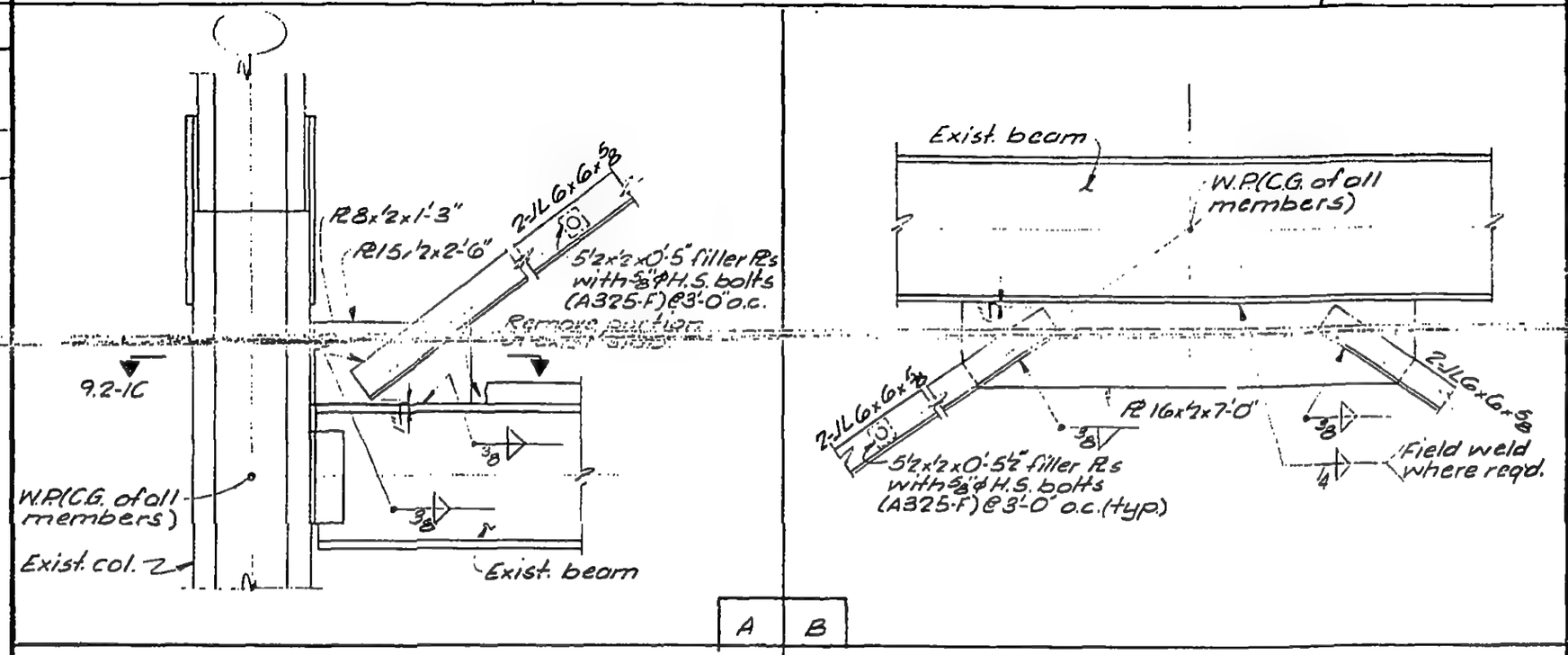

LICENSED PROFESSIONAL ENGINEER LESLIE E. ROBERTSON No 34360 UNIVERSITY OF THE STATE OF NEW YORK

DESIGNED

DRAWN TR

REVIEWED

13-K9.2-2

SKILLING, HELLE, CHRISTIANSEN, ROBERTSON — Structural & Civil Engineers

PROJECT THE WORLD TRADE CENTER | TITLE BRACING 310-332 DETAILS | DATE 11-3-72

REVISIONS

Released for construction 11-20-72

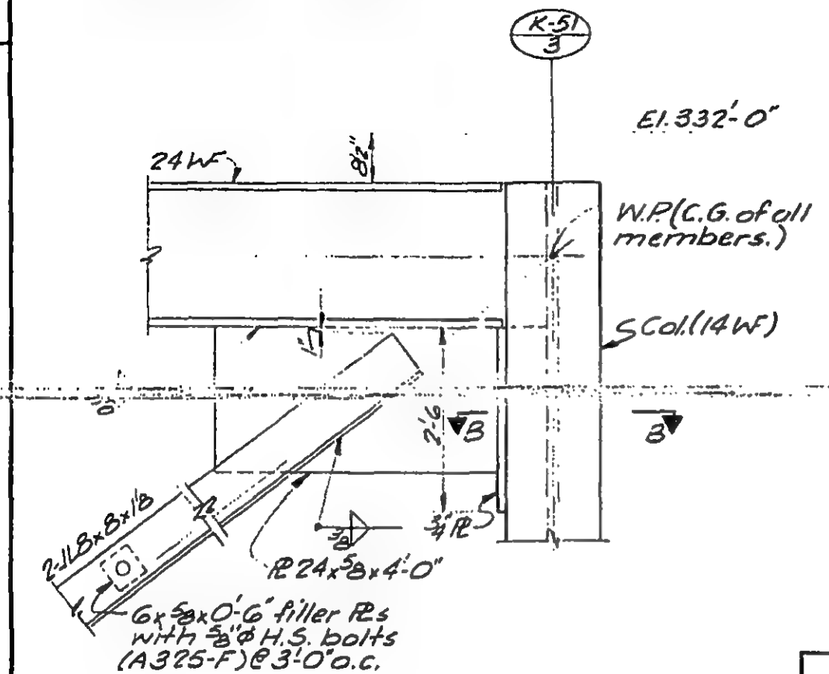

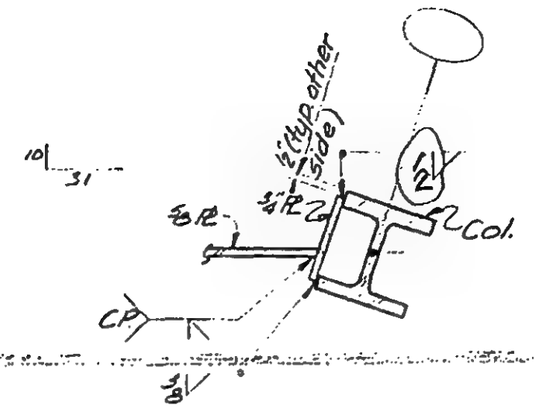

A	B
C	D

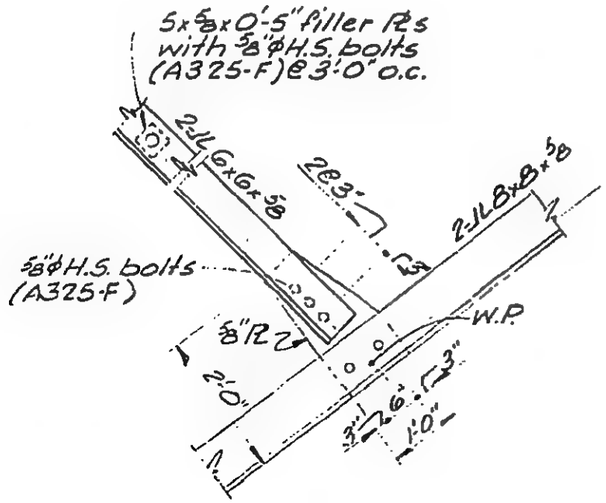

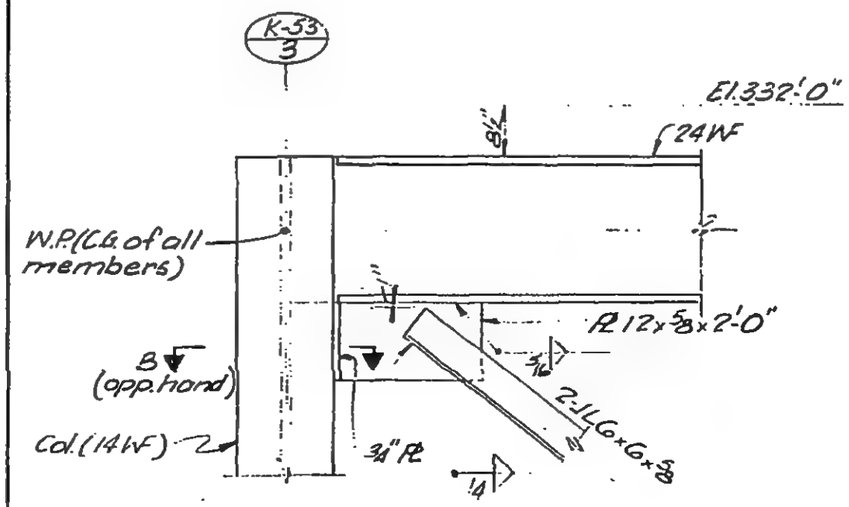

LICENSED PROFESSIONAL ENGINEER — LESLIE E. ROBERTSON — No 34360 — UNIVERSITY OF THE STATE OF NEW YORK

DESIGNED

DRAWN TR

REVIEWED

13-K9.2-3

SKILLING, HELLE, CHRISTIANSEN, ROBERTSON — Structural & Civil Engineers

PROJECT THE WORLD TRADE CENTER | TITLE BRACING 310-332 DETAILS | DATE 11-3-72

REVISIONS

Released for construction 11-20-72

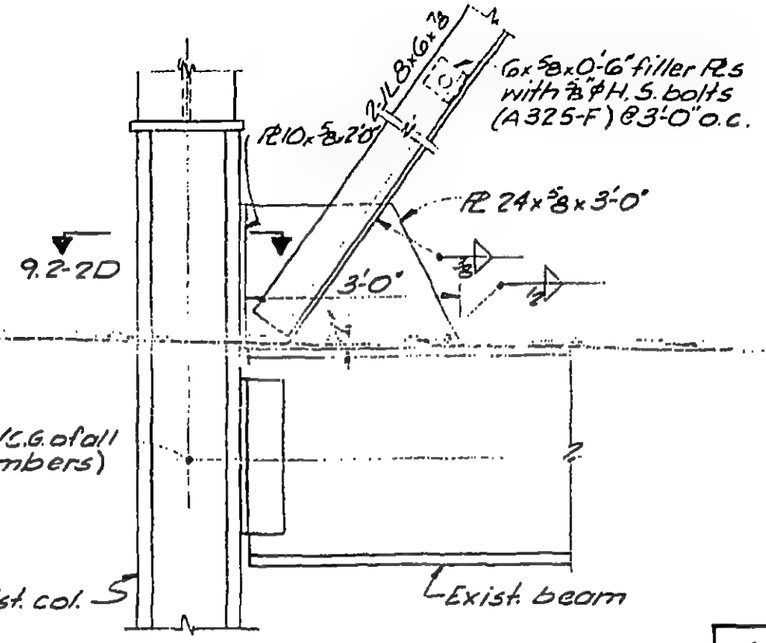

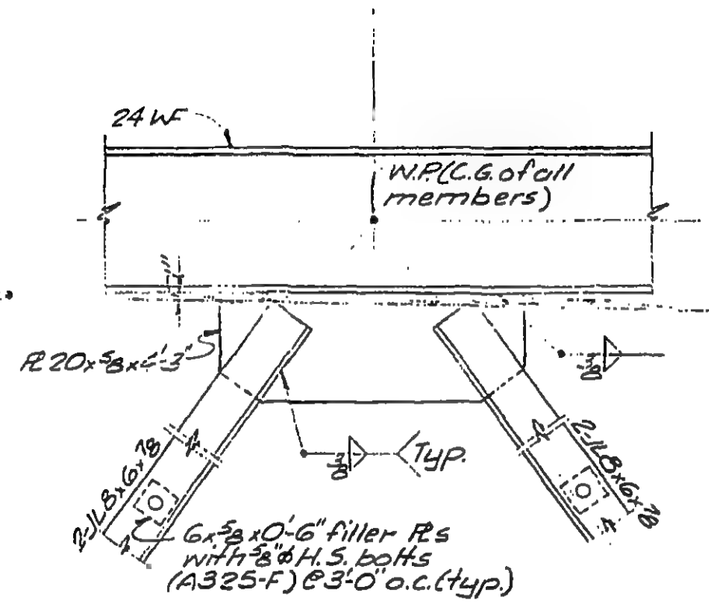

A	B

LICENSED PROFESSIONAL ENGINEER — LESLIE E. ROBERTSON — No 34360 — UNIVERSITY OF THE STATE OF NEW YORK

DESIGNED

DRAWN TR

REVIEWED

13-K 9.2-4

SKILLING, HELLE, CHRISTIANSEN, ROBERTSON — Structural & Civil Engineers

PROJECT: THE WORLD TRADE CENTER | TITLE: NOTCH & NEW SUPPORT FOR EXIST. BEAMS-ELEVATION | DATE: 3-15-73

REVISIONS

5-7-73

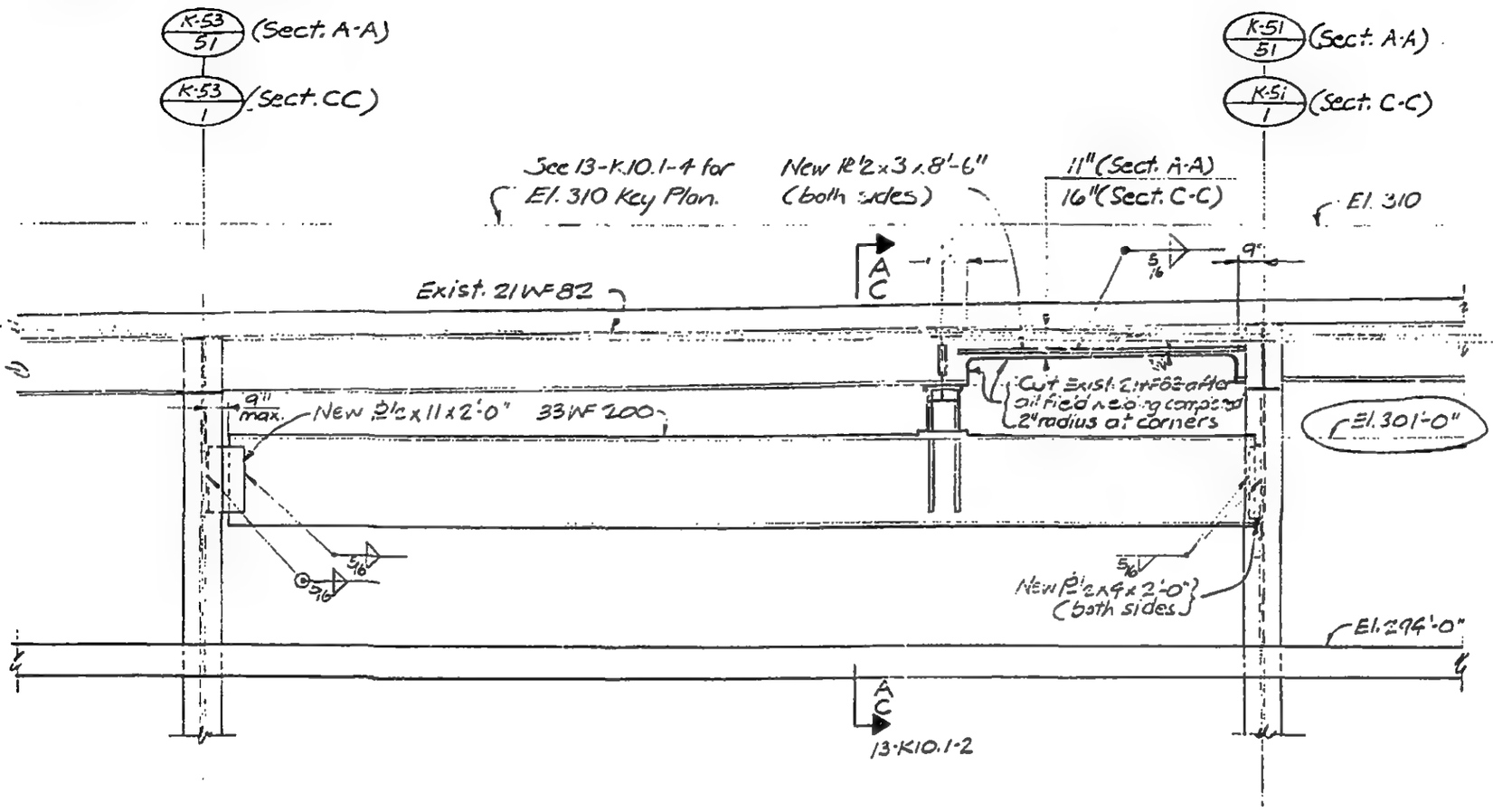

LICENSED PROFESSIONAL ENGINEER
LESLIE E. ROBERTSON
No 34360
UNIVERSITY OF THE STATE OF NEW YORK

DESIGNED: JTH

DRAWN: [illegible]

REVIEWED

A
C

13-K10.1-1

SKILLING, HELLE, CHRISTIANSEN, ROBERTSON — Structural & Civil Engineers

PROJECT: THE WORLD TRADE CENTER | TITLE: NOTCH & NEW SUPPORT FOR EXIST. BEAMS – SECTIONS | DATE: 3-15-73

REVISIONS

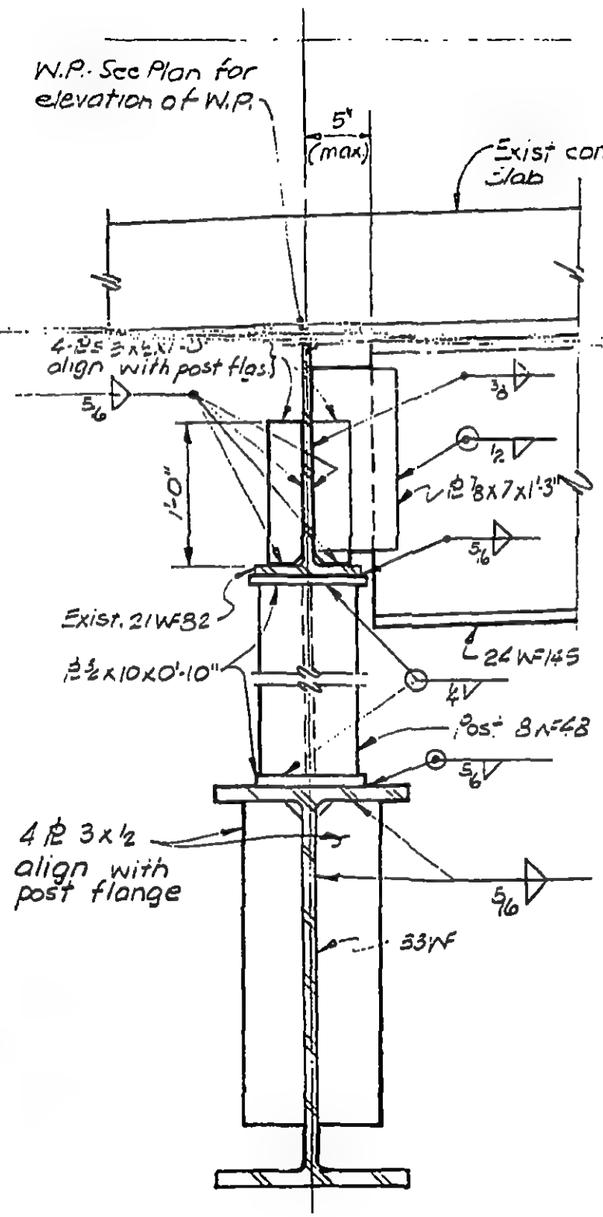

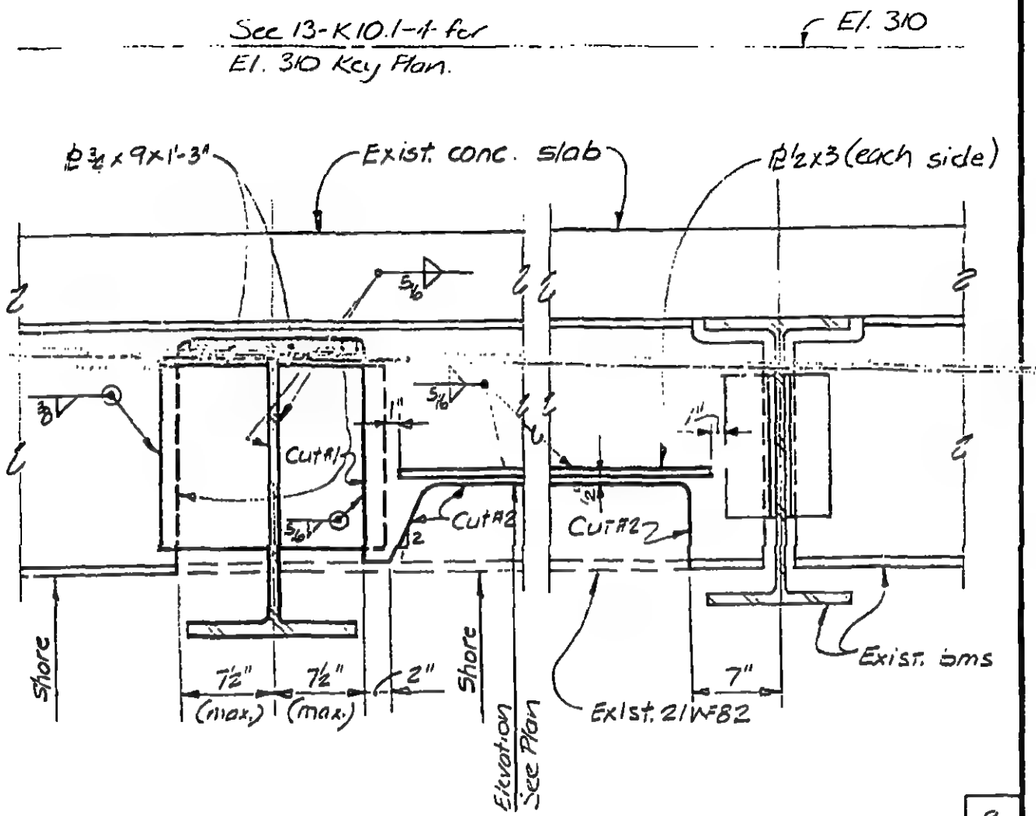

B

Construction Sequence

1. Place shores.
2. Make cut #1 (1" radius at corners)
3. Complete all steel erection and field welding.
4. Remove shores.
5. Make cut #2 (2" radius at corners)

LICENSED PROFESSIONAL ENGINEER — LESLIE E. ROBERTSON — No 34360 — UNIVERSITY OF THE STATE OF NEW YORK

DESIGNED JTM

DRAWN

REVIEWED

opp. hand. A C

13-K10.1-2

SKILLING, HELLE, CHRISTIANSEN, ROBERTSON — Structural & Civil Engineers

PROJECT THE WORLD TRADE CENTER | TITLE NOTCH & NEW SUPPORT FOR EXIST. BEAM - SECTION | DATE 3-15-73

REVISIONS

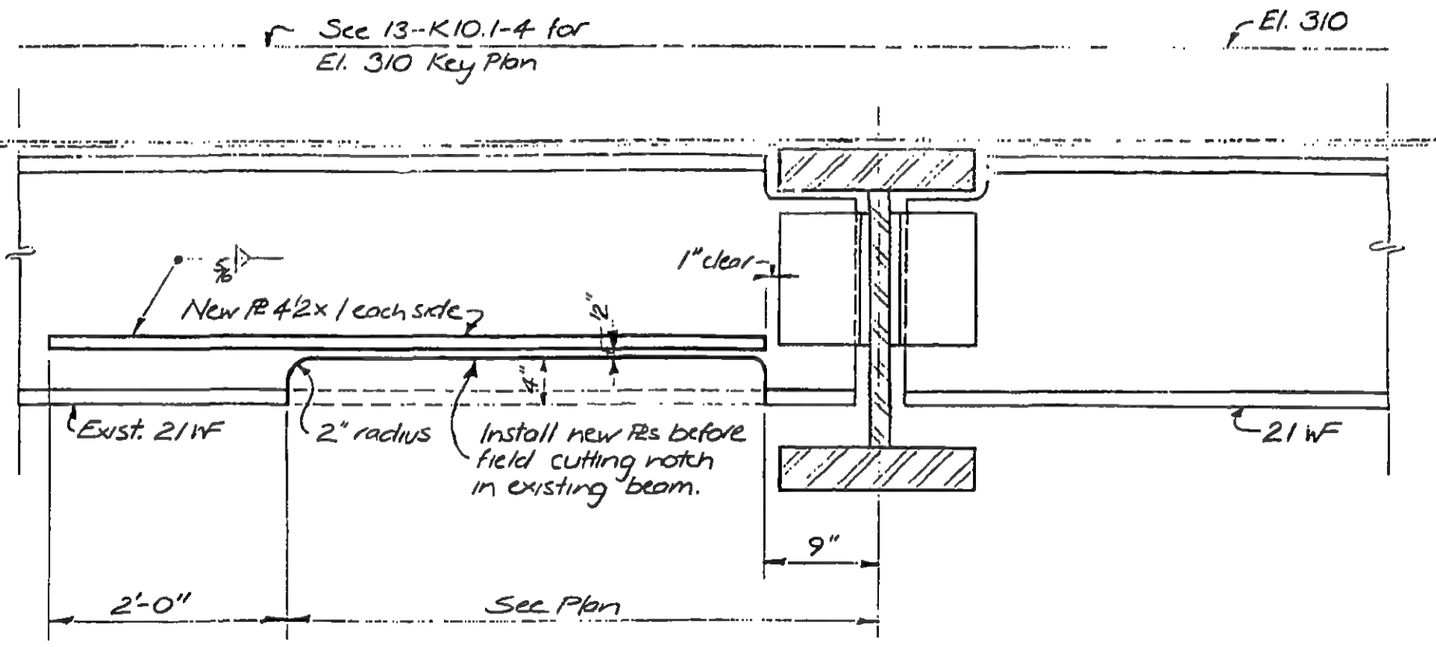

LICENSED PROFESSIONAL ENGINEER LESLIE E. ROBERTSON No 34960 UNIVERSITY OF THE STATE OF NEW YORK

DESIGNED

DRAWN

REVIEWED

13-K10.1-3

SKILLING, HELLE, CHRISTIANSEN, ROBERTSON — Structural & Civil Engineers

PROJECT: THE WORLD TRADE CENTER

TITLE: NOTCH & NEW SUPPORT FOR EXIST. BEAMS - KEY PLAN EL. 310

DATE: 3-15-73

REVISIONS

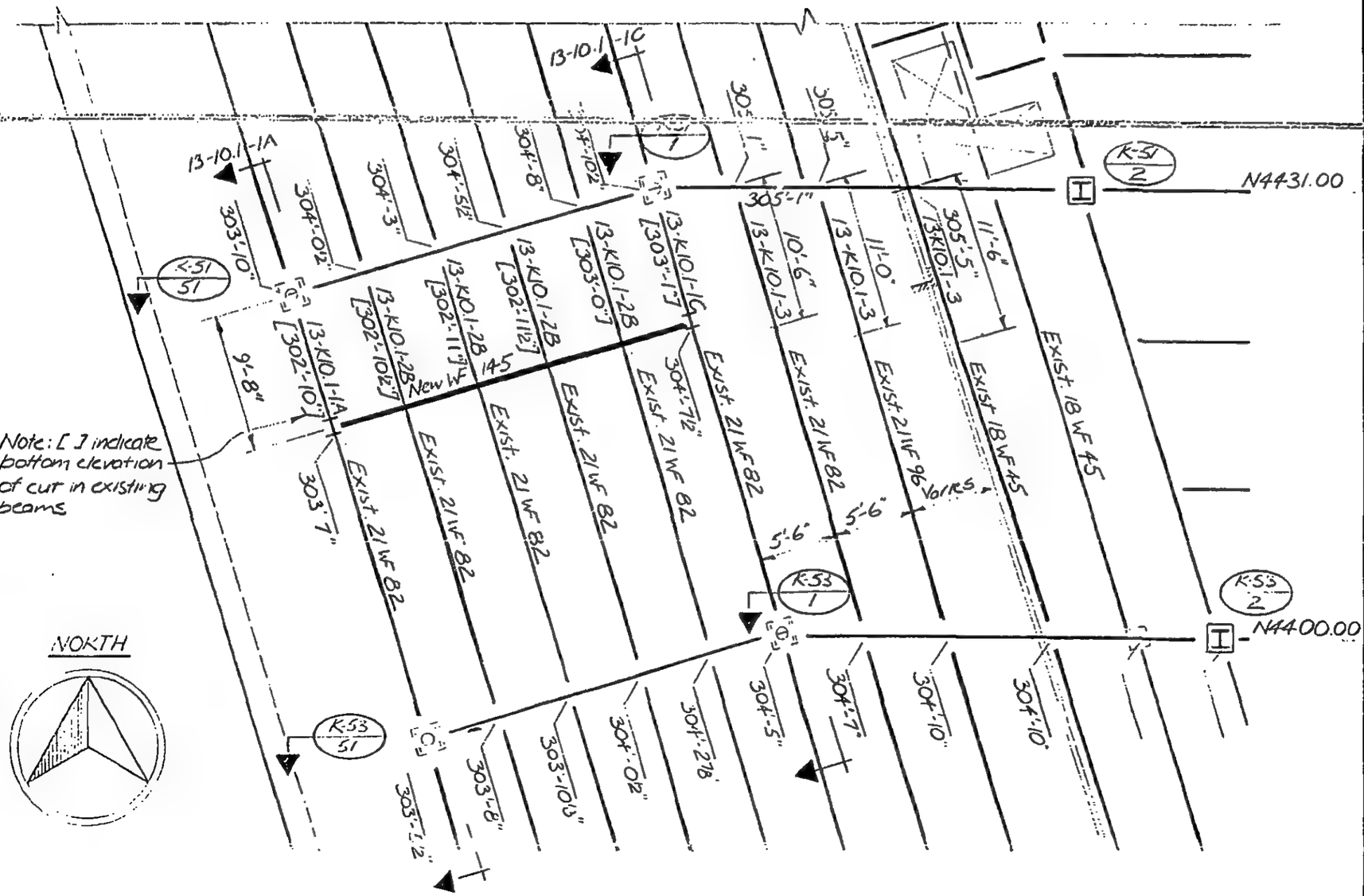

LICENSED PROFESSIONAL ENGINEER — LESLIE E. ROBERTSON — No. 34360 — UNIVERSITY OF THE STATE OF NEW YORK

DESIGNED

DRAWN: J Banki

REVIEWED

13-K10.1-4

SKILLING, HELLE, CHRISTIANSEN, ROBERTSON — Structural & Civil Engineers

PROJECT: THE WORLD TRADE CENTER | TITLE: SECTION AT ESCALATOR - EL. 294'-0" | DATE: 3-15-73

REVISIONS

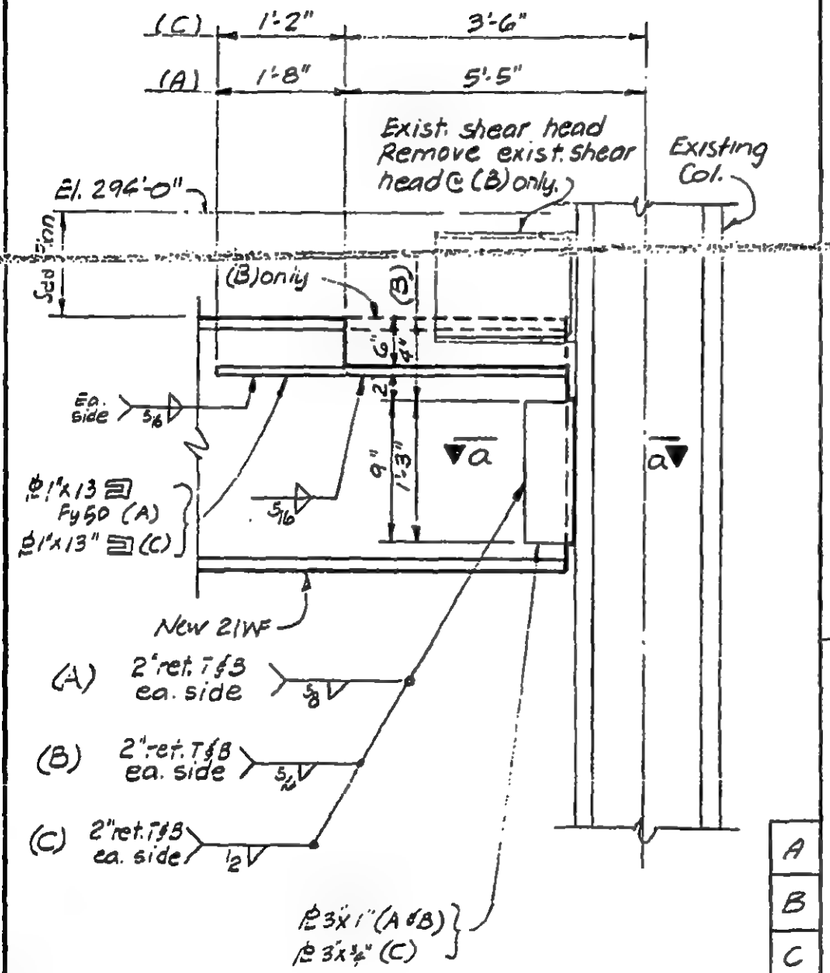

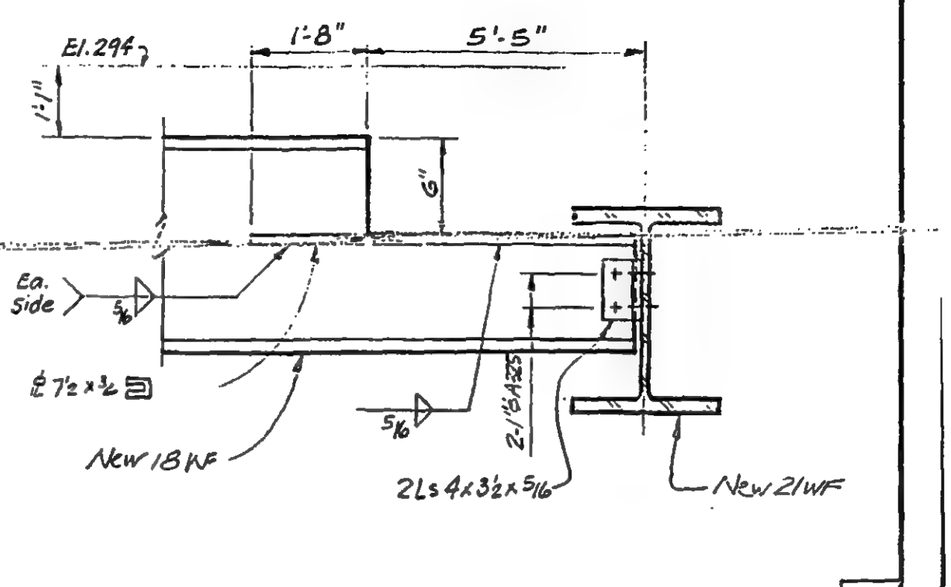

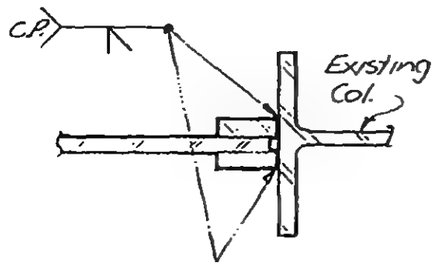

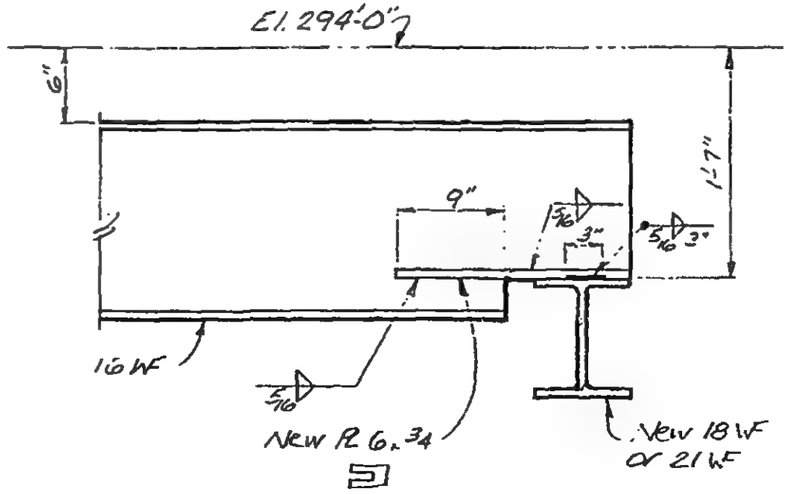

a

LICENSED PROFESSIONAL ENGINEER
LESLIE E. ROBERTSON
No 34360
UNIVERSITY OF THE STATE OF NEW YORK

DESIGNED KC

DRAWN

REVIEWED

13-K10.2-1

SKILLING, HELLE, CHRISTIANSEN, ROBERTSON — Structural & Civil Engineers

PROJECT: THE WORLD TRADE CENTER | TITLE: SECTION AT ESCALATOR - EL. 294'-0" | DATE: 3-15-73

REVISIONS

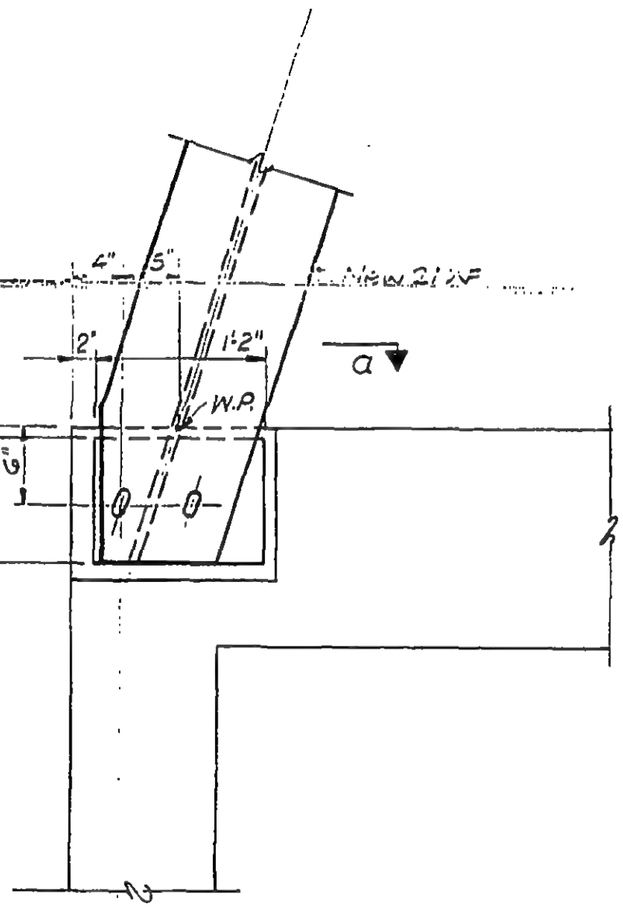

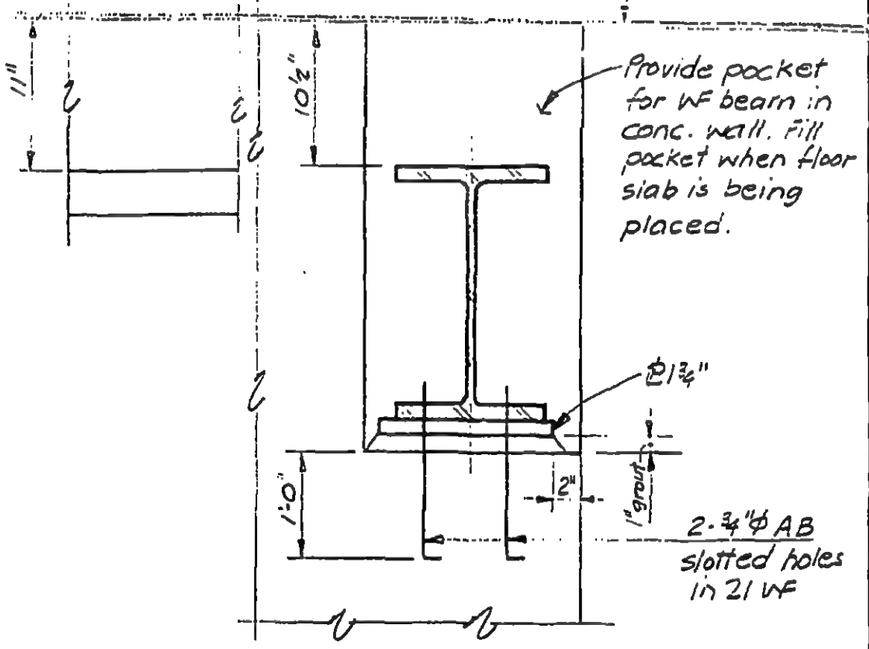

LICENSED PROFESSIONAL ENGINEER
LESLIE E. ROBERTSON
No 34360
UNIVERSITY OF THE STATE OF NEW YORK

DESIGNED: KC
DRAWN:
REVIEWED:

a

13-K10.2-2

SKILLING, HELLE, CHRISTIANSEN, ROBERTSON — Structural & Civil Engineers

PROJECT: THE WORLD TRADE CENTER | TITLE: DETAIL AT COL. HS/2 - EL. 284 | DATE: 3-15-73

REVISIONS

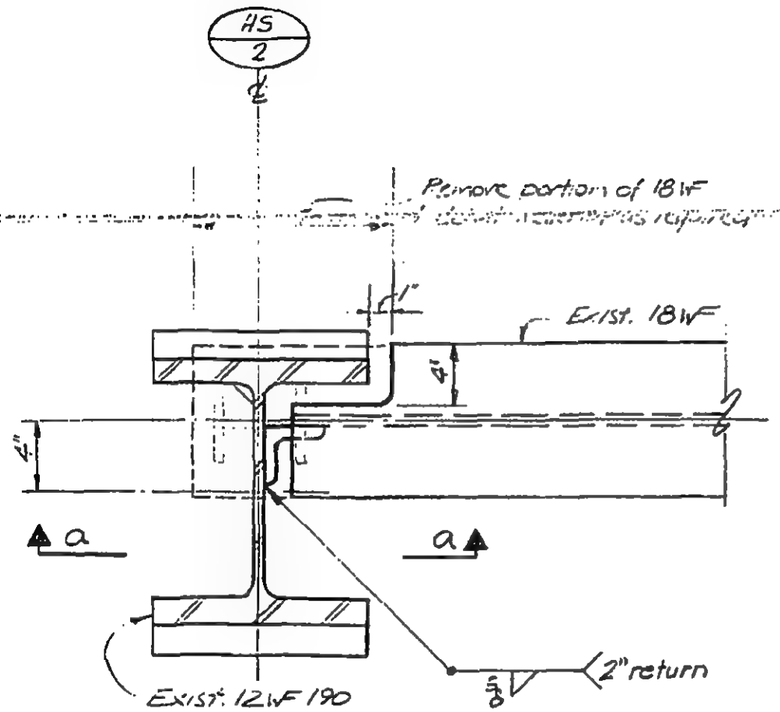

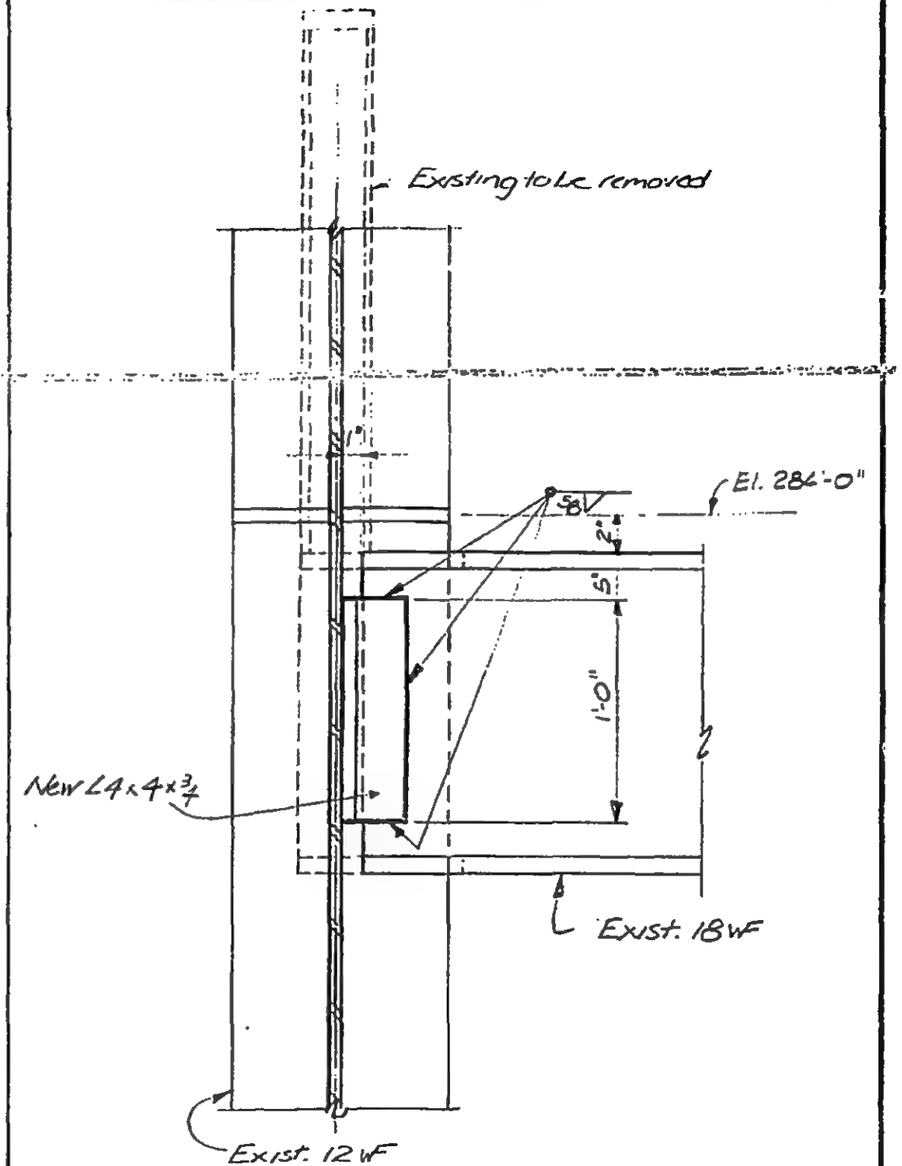

LICENSED PROFESSIONAL ENGINEER
LESLIE E. ROBERTSON
No 34360
UNIVERSITY OF THE STATE OF NEW YORK

DESIGNED

DRAWN

REVIEWED

A | a

13-K10.3-4

SKILLING, HELLE, CHRISTIANSEN, ROBERTSON — Structural & Civil Engineers

PROJECT THE WORLD TRADE CENTER | TITLE EL. 310, ZONE K3 - ESC. H1 & H2 - CONN. DETAILS | DATE 5-7-73

REVISIONS

A

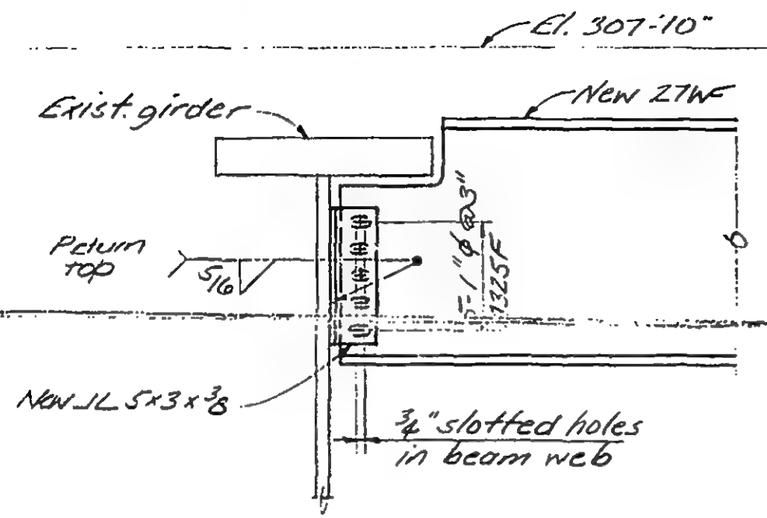

B

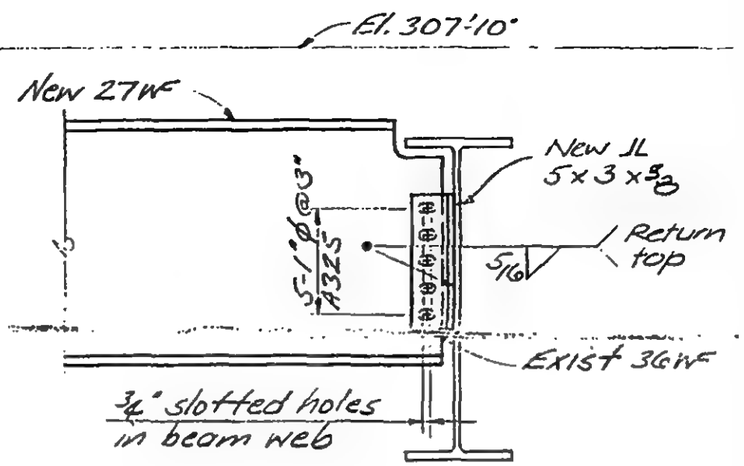

C

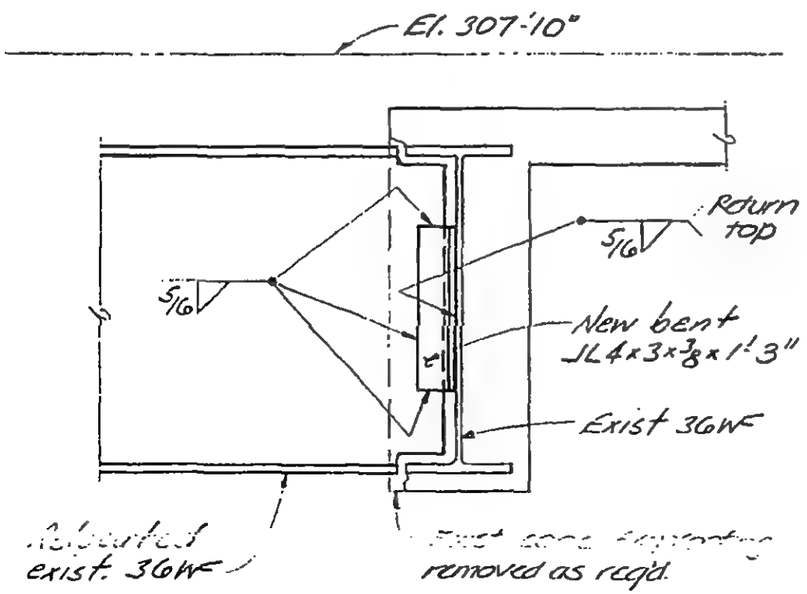

LICENSED PROFESSIONAL ENGINEER — LESLIE E. ROBERTSON — No. 34360 — UNIVERSITY OF THE STATE OF NEW YORK

DESIGNED KC

DRAWN JG, JB

REVIEWED LER

13-K-11.1-1

SKILLING, HELLE, CHRISTIANSEN, ROBERTSON — Structural & Civil Engineers

PROJECT THE WORLD TRADE CENTER | TITLE EL. 310 - ZONE K3 - STAIR K3 - CONN. DETAILS | DATE 5-7-73

REVISIONS

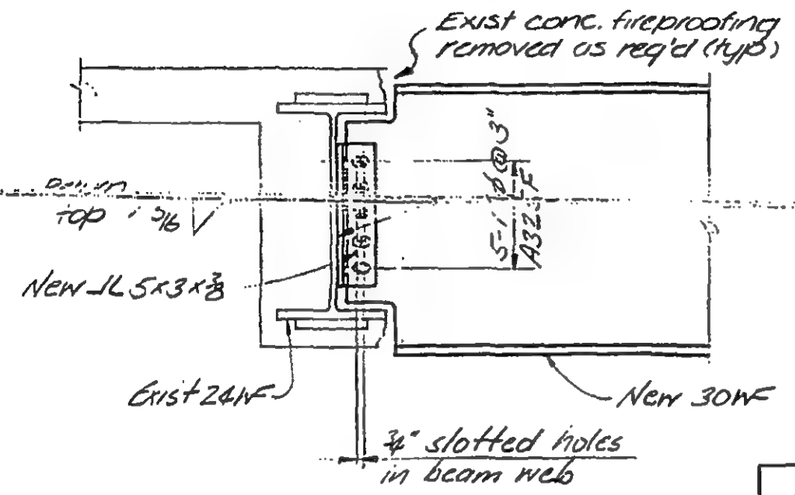

A

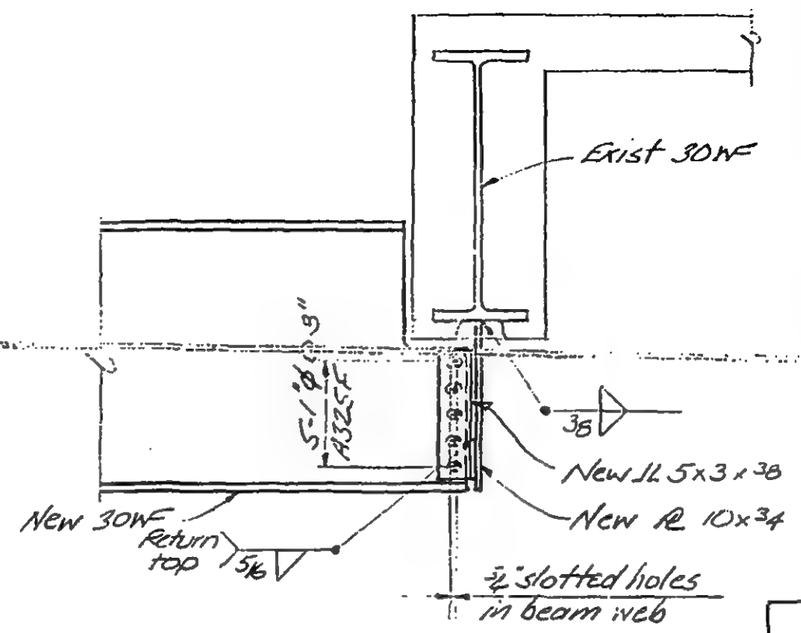

B

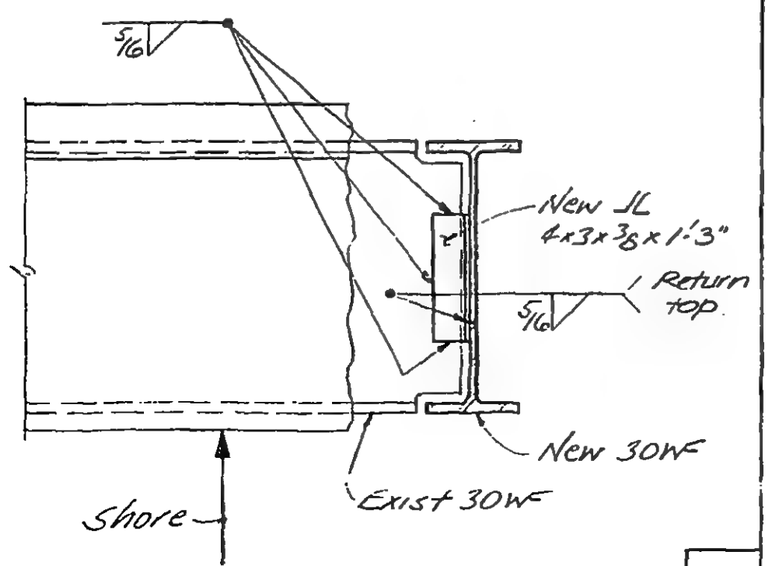

C

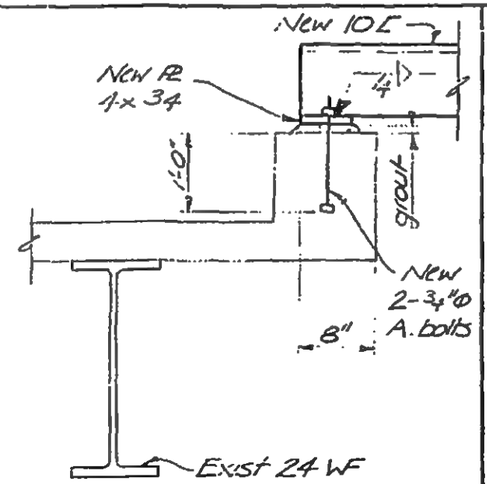

D

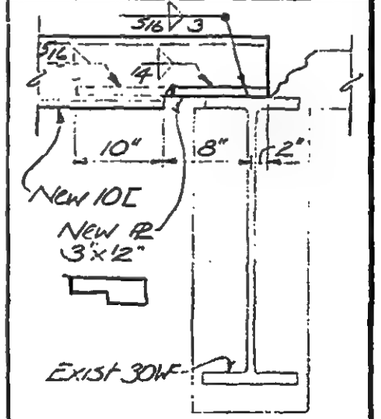

E

13-K11.1-2

LICENSED PROFESSIONAL ENGINEER — LESLIE E. ROBERTSON — No 34360 — UNIVERSITY OF THE STATE OF NEW YORK

DESIGNED KC

DRAWN JB

REVIEWED MAB

SKILLING, HELLE, CHRISTIANSEN, ROBERTSON — Structural & Civil Engineers

PROJECT: THE WORLD TRADE CENTER | TITLE: EL. 310 - ZONE K3 - "H" ELEV. - CONN DETAILS | DATE: 5-7-73

REVISIONS

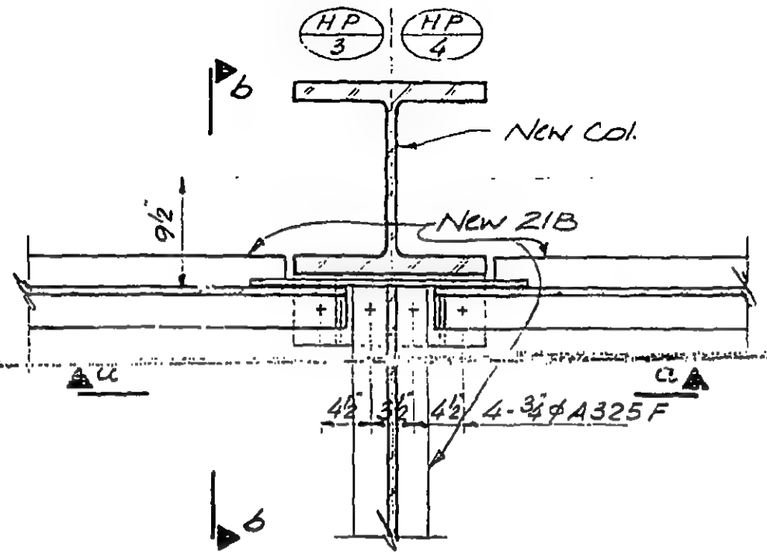

A

a | b

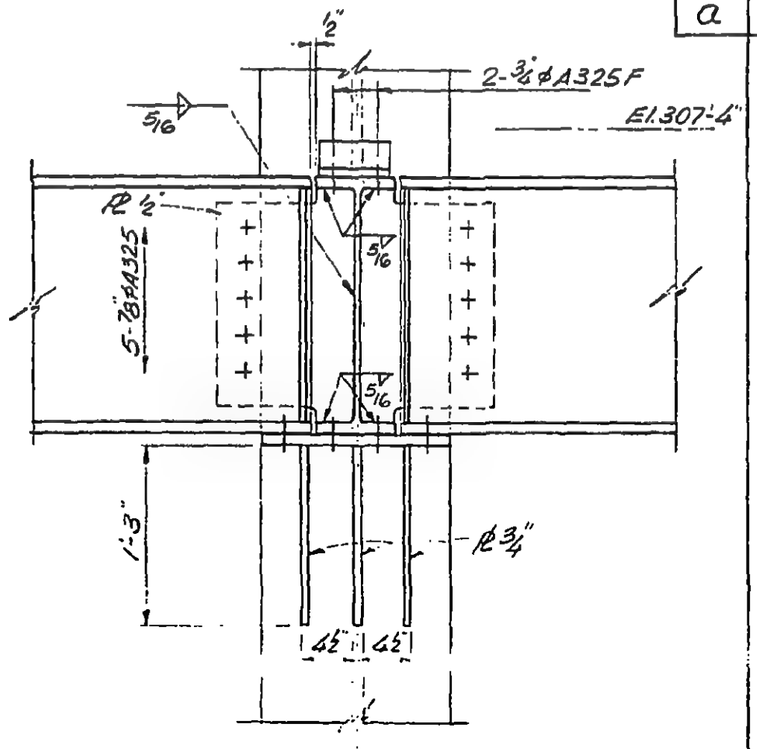

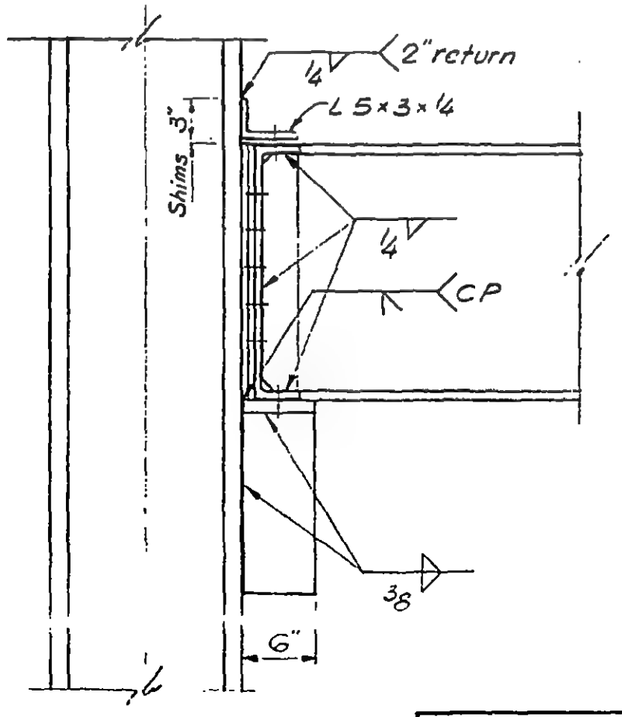

LICENSED PROFESSIONAL ENGINEER — LESLIE E. ROBERTSON — No 34360 — UNIVERSITY OF THE STATE OF NEW YORK

DESIGNED
DRAWN
REVIEWED WEB

13-K11.1-3.1

SKILLING, HELLE, CHRISTIANSEN, ROBERTSON — Structural & Civil Engineers

PROJECT: THE WORLD TRADE CENTER | TITLE: EL. 310 - ZONE K.5 - F.A. INTAKE-CONN. DETAILS | DATE: 5-7-73

REVISIONS

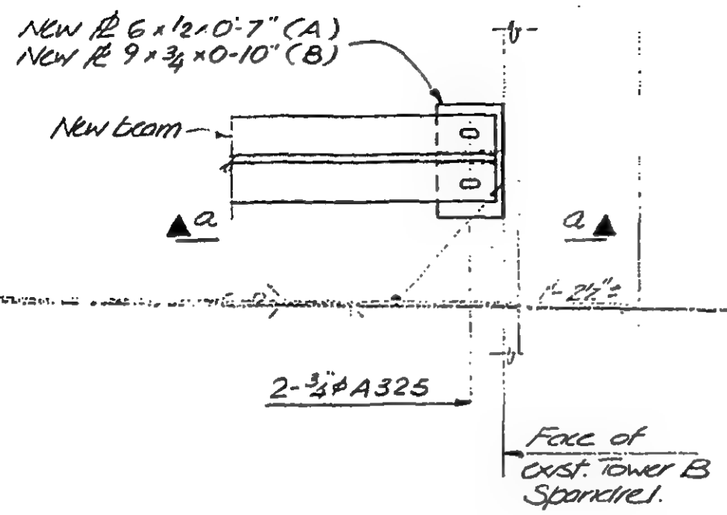

B

A

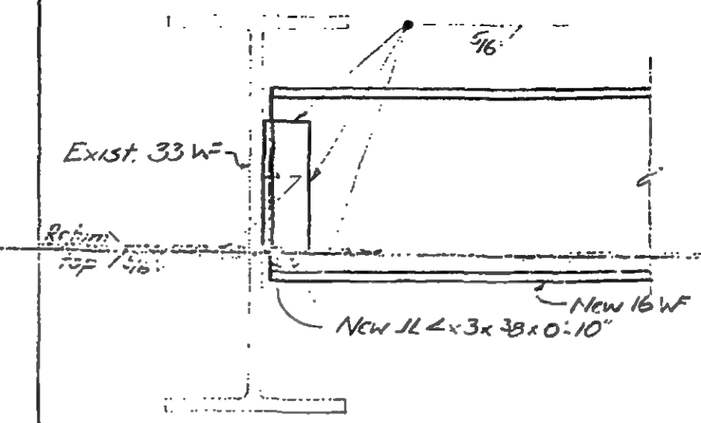

C

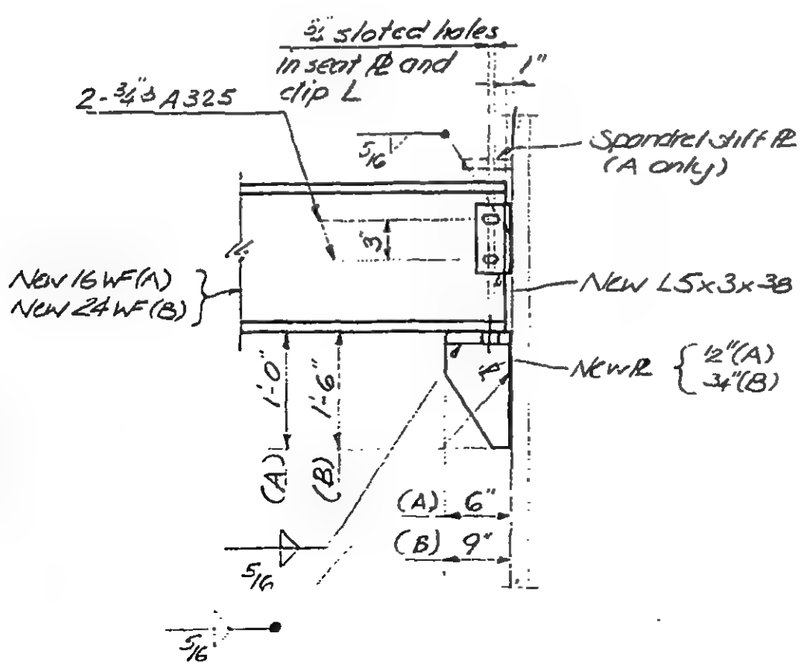

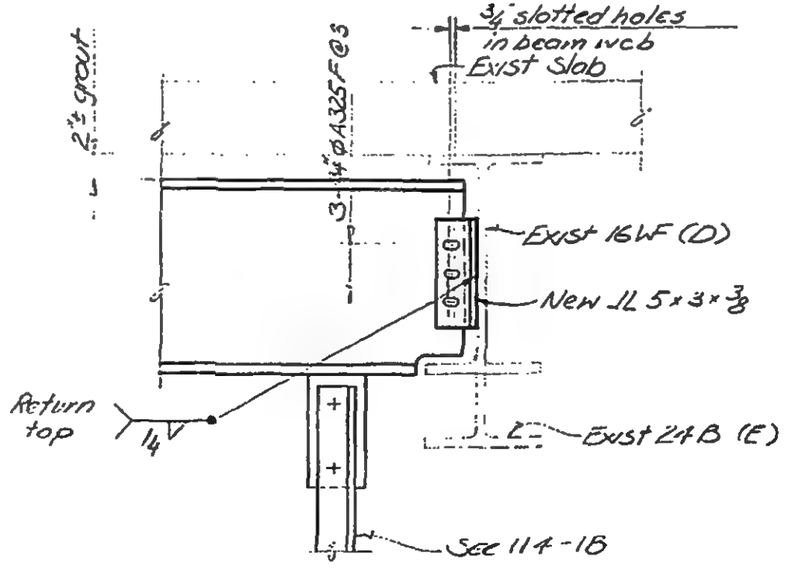

D

a

E

13-K11.2-3.1

LICENSED PROFESSIONAL ENGINEER
LESLIE E. ROBERTSON
No 34360
UNIVERSITY OF THE STATE OF NEW YORK

DESIGNED K. Chiang
DRAWN
REVIEWED Wat

SKILLING, HELLE, CHRISTIANSEN, ROBERTSON — Structural & Civil Engineers

PROJECT THE WORLD TRADE CENTER | TITLE EL 310 ZONE K-F.A. INTAKE CONN. DETAILS | DATE 5-7-73

REVISIONS

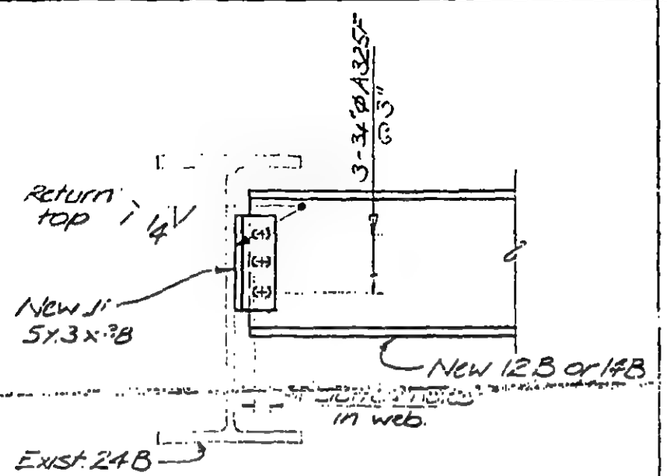

F

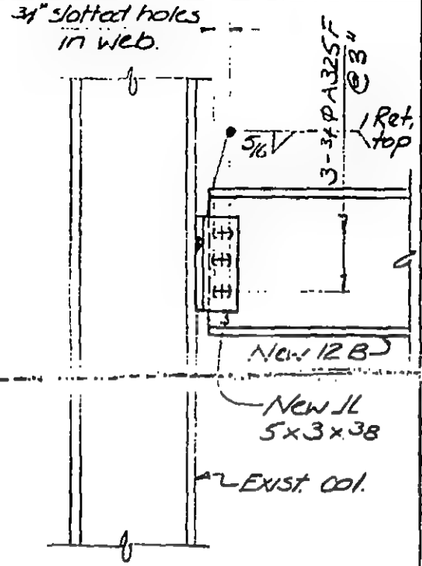

G

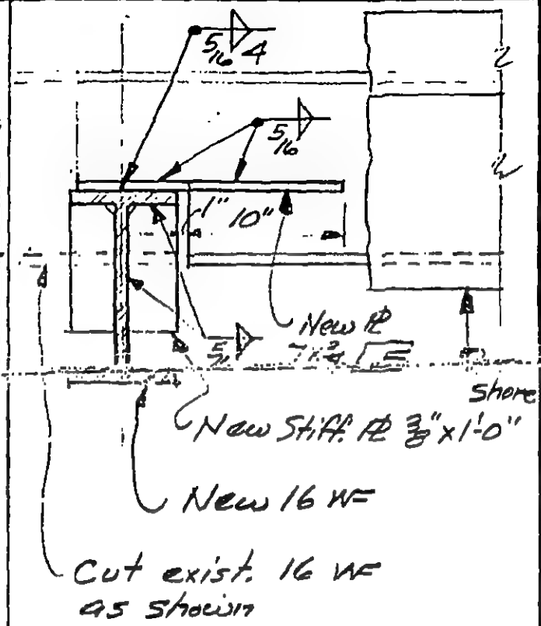

H

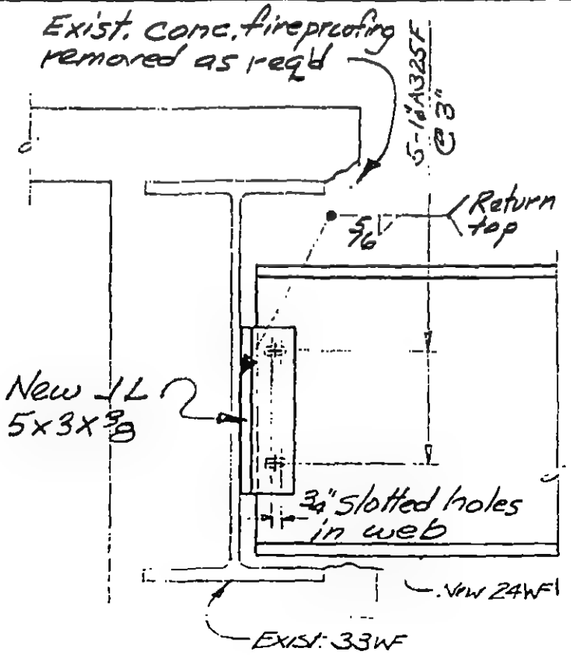

J

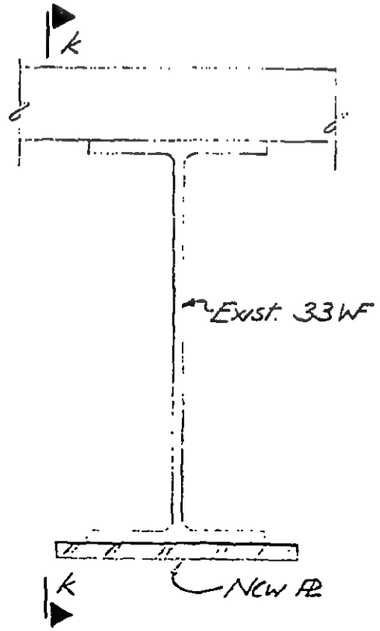

K

k

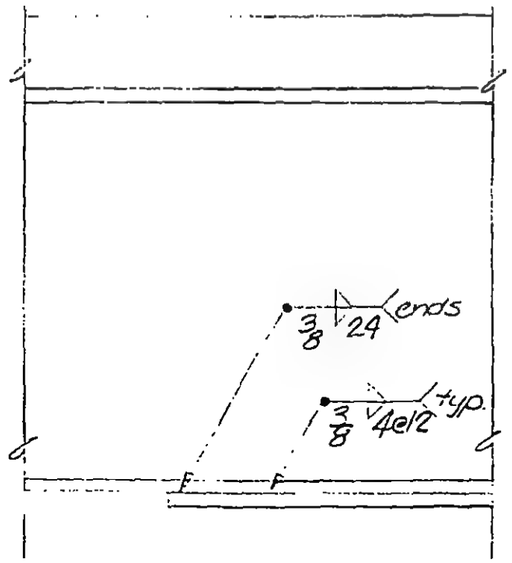

13-K11.2-3.2

LICENSED PROFESSIONAL ENGINEER
LESLIE E. ROBERTSON
No 34360
UNIVERSITY OF THE STATE OF NEW YORK

DESIGNED

DRAWN J Banks

REVIEWED WaB

SKILLING, HELLE, CHRISTIANSEN, ROBERTSON — Structural & Civil Engineers

PROJECT: THE WORLD TRADE CENTER

TITLE: EL 310-ZONE K3-"H" ELEV.-CONN DETAILS

DATE: 5-7-73

REVISIONS

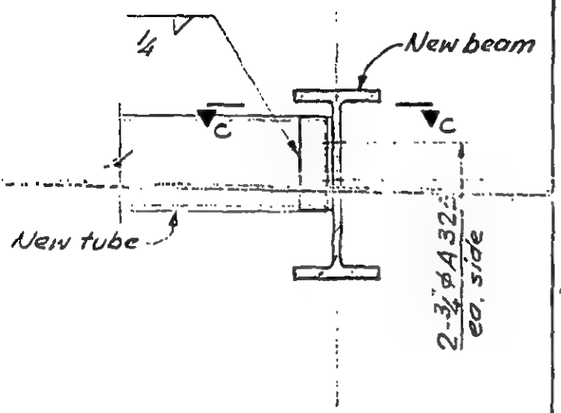

C

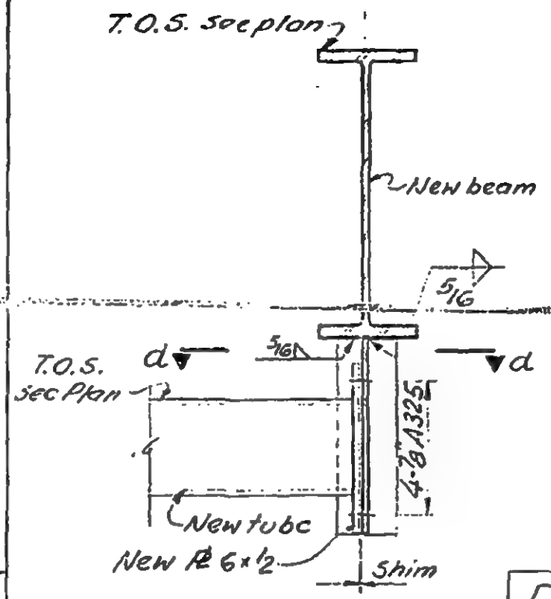

D e

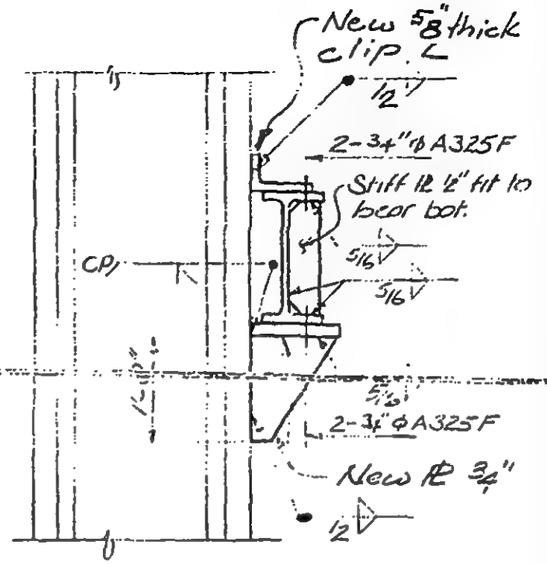

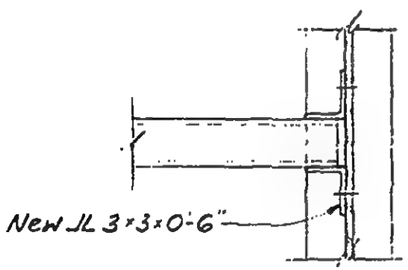

c

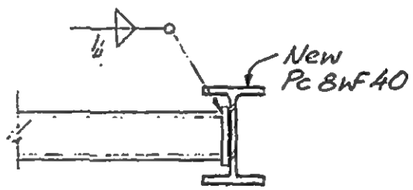

d E

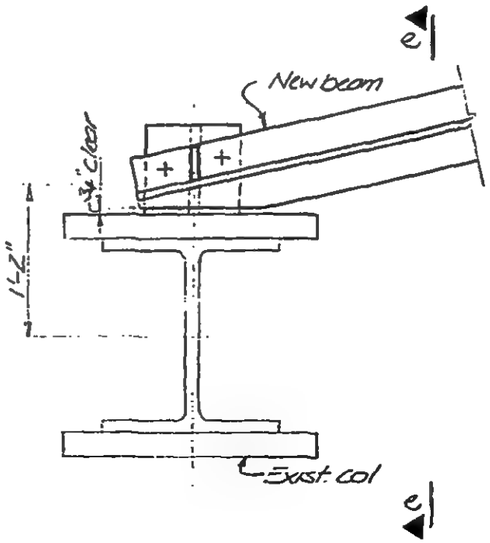

13-K11.1-3.2

LICENSED PROFESSIONAL ENGINEER
LESLIE E. ROBERTSON
No 34360
UNIVERSITY OF THE STATE OF NEW YORK

DESIGNED K. Chiang

DRAWN

REVIEWED

SKILLING, HELLE, CHRISTIANSEN, ROBERTSON — Structural & Civil Engineers

PROJECT: THE WORLD TRADE CENTER | TITLE: EL. 310 -ZONE K3-"H" ELEV.-CONN DETAILS | DATE: 5-7-73.

REVISIONS

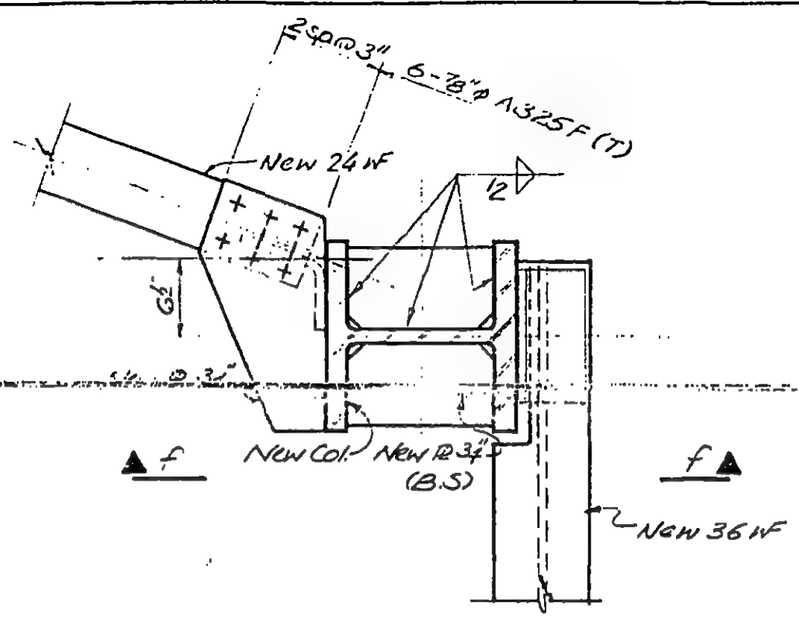

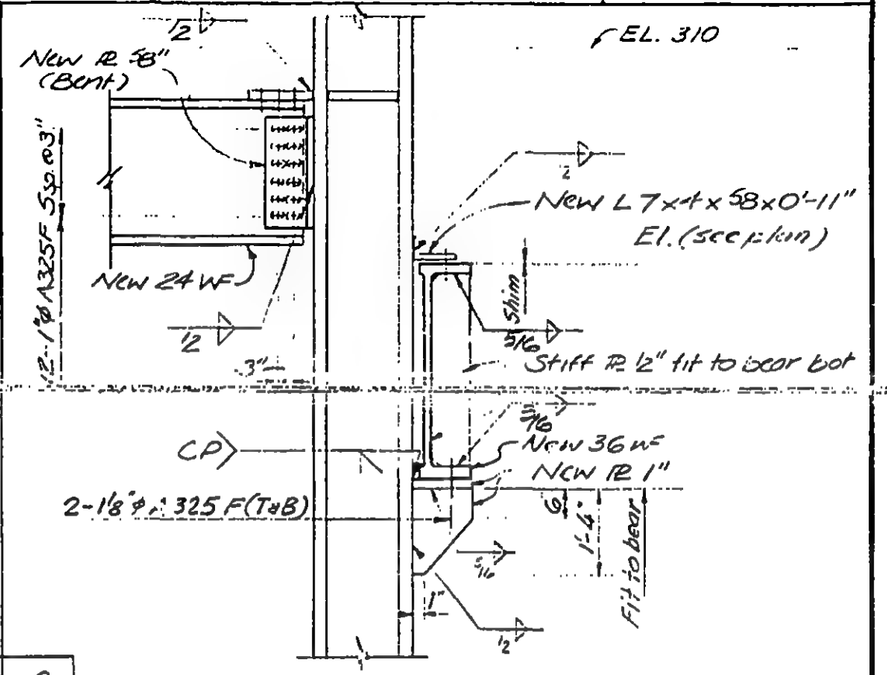

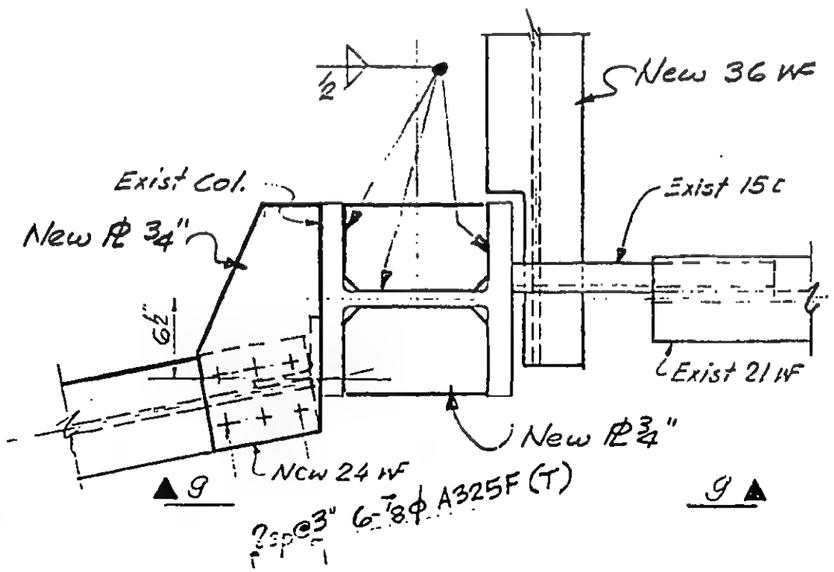

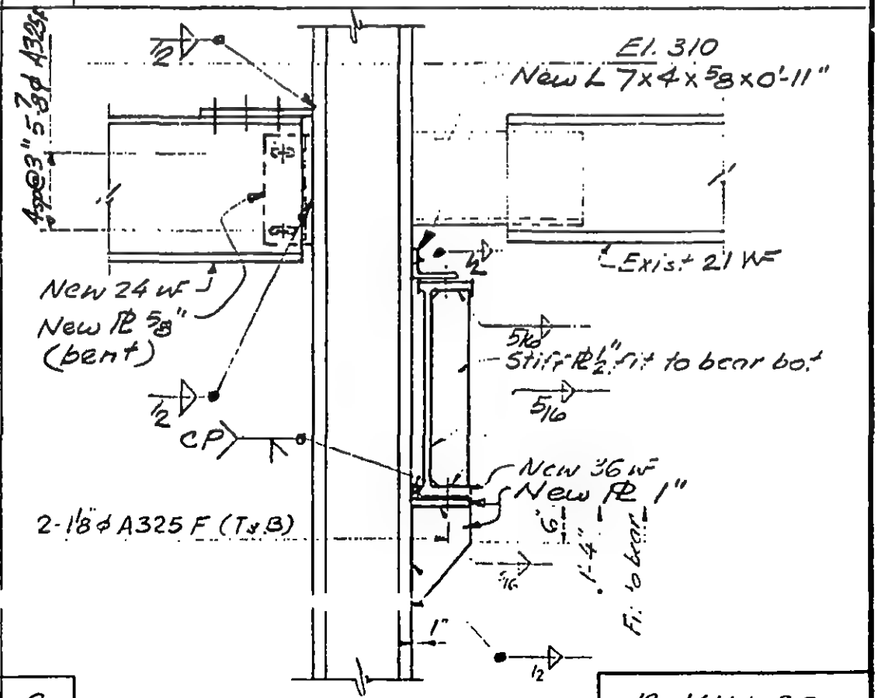

F | f

G | g

13-K11.1-3.3

LICENSED PROFESSIONAL ENGINEER — LESLIE E. ROBERTSON — No 34360 — UNIVERSITY OF THE STATE OF NEW YORK

DESIGNED: K.C.

DRAWN: John Giacinto

REVIEWED: WAB

SKILLING, HELLE, CHRISTIANSEN, ROBERTSON — Structural & Civil Engineers

PROJECT: THE WORLD TRADE CENTER

TITLE: EL. 310 - ZONE K3 - "1" ELEV. - CONN. DETAILS

DATE: 5-7-73

REVISIONS

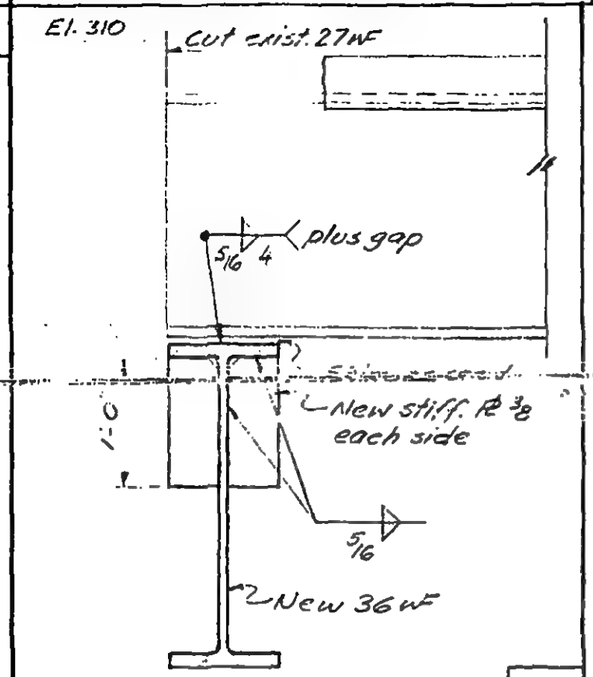

H

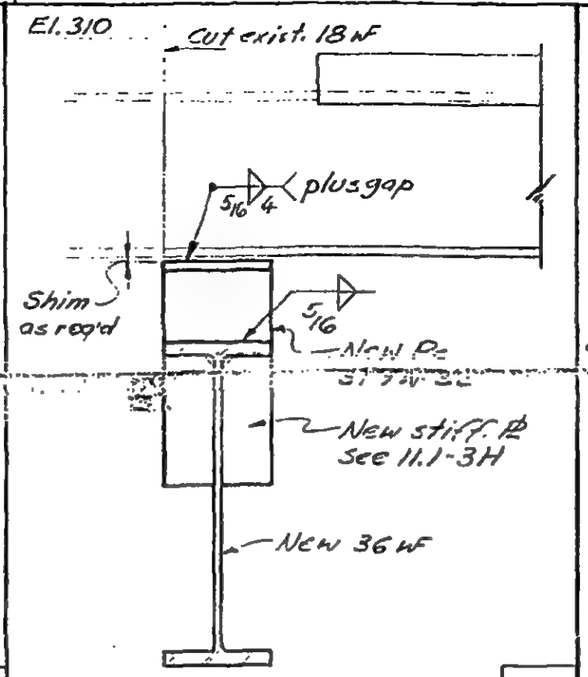

J

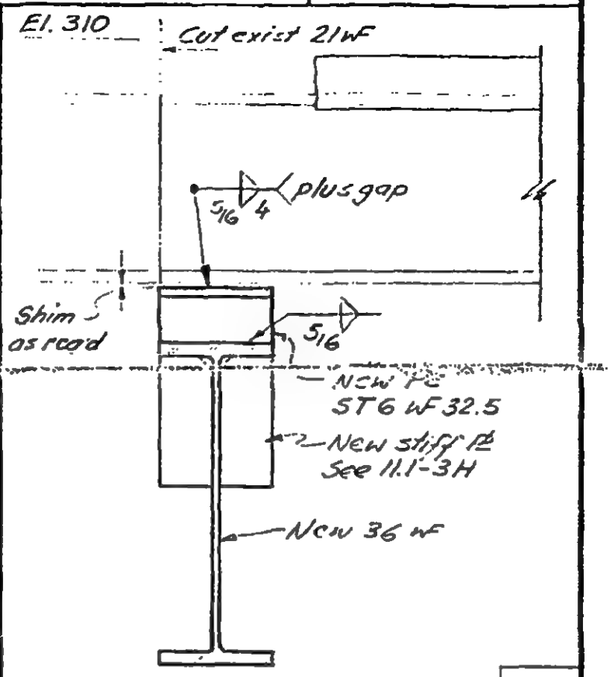

K

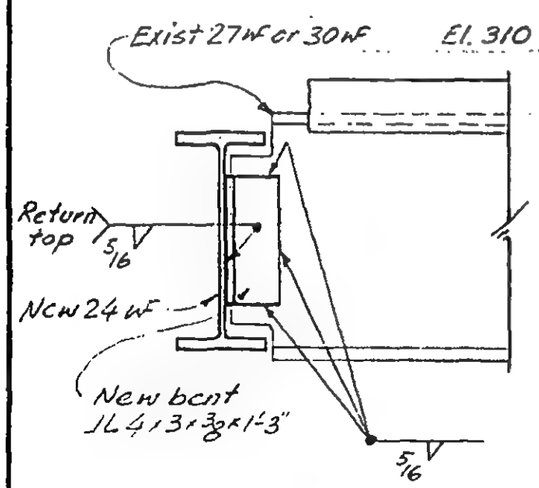

M

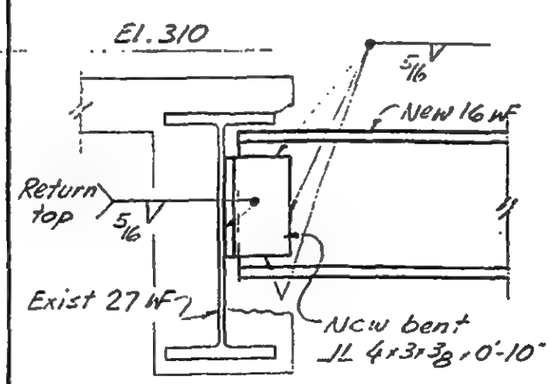

N

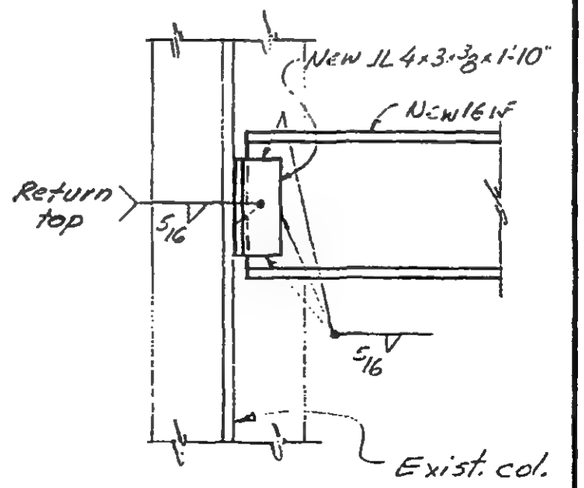

P

13-K11.1-3.4

LICENSED PROFESSIONAL ENGINEER
LESLIE E. ROBERTSON
No 34360
UNIVERSITY OF THE STATE OF NEW YORK

DESIGNED

DRAWN

REVIEWED WAB

SKILLING, HELLE, CHRISTIANSEN, ROBERTSON — Structural & Civil Engineers

PROJECT THE WORLD TRADE CENTER | TITLE EL. 310 - ZONE K3 - COLUMN REMOVAL DETAILS | DATE 5-7-73

REVISIONS

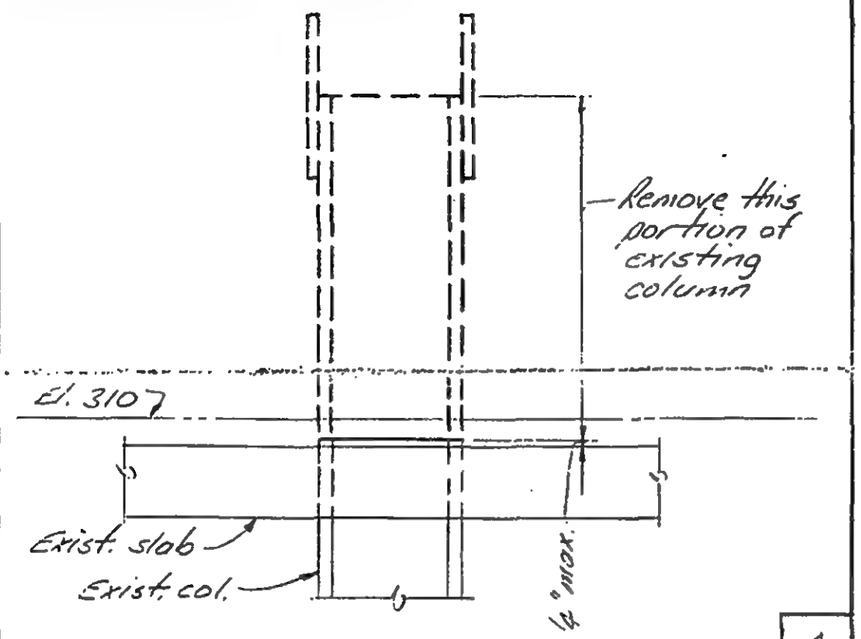

A

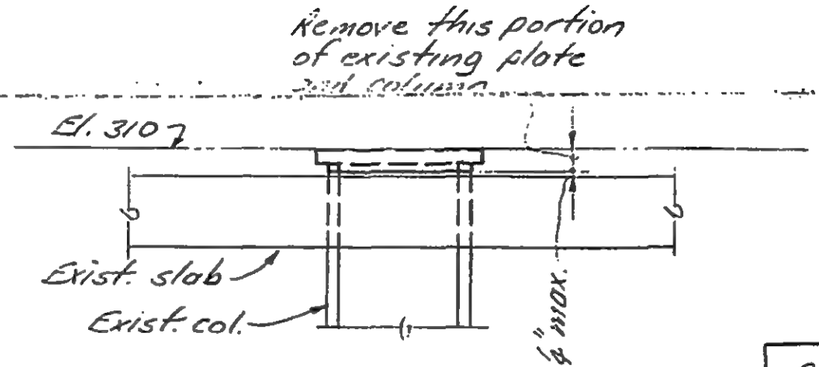

B

LICENSED PROFESSIONAL ENGINEER
LESLIE E. ROBERTSON
No 34360
UNIVERSITY OF THE STATE OF NEW YORK

DESIGNED

DRAWN JA

REVIEWED WAB

13-K11.1-4

SKILLING, HELLE, CHRISTIANSEN, ROBERTSON — Structural & Civil Engineers

PROJECT: THE WORLD TRADE CENTER | TITLE: El. 310 - ZONE K5-SERVICE ELEV.-CONN DETAILS | DATE: 5-7-73

REVISIONS

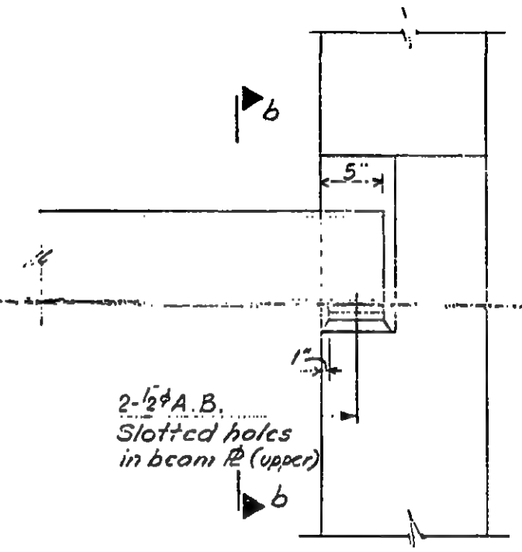

A

a

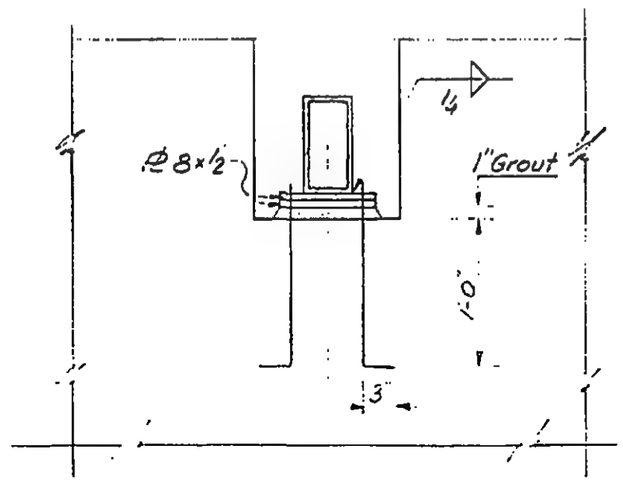

LICENSED PROFESSIONAL ENGINEER
LESLIE E. ROBERTSON
No 34360
UNIVERSITY OF THE STATE OF NEW YORK

DESIGNED
K. Chiang
DRAWN
REVIEWED

13-K11.2-4.1

SKILLING, HELLE, CHRISTIANSEN, ROBERTSON — Structural & Civil Engineers

PROJECT: THE WORLD TRADE CENTER | TITLE: EL. 310 - ZONE K5 - SERVICE ELEV. - CONN. DETAILS | DATE: 5-7-73

REVISIONS

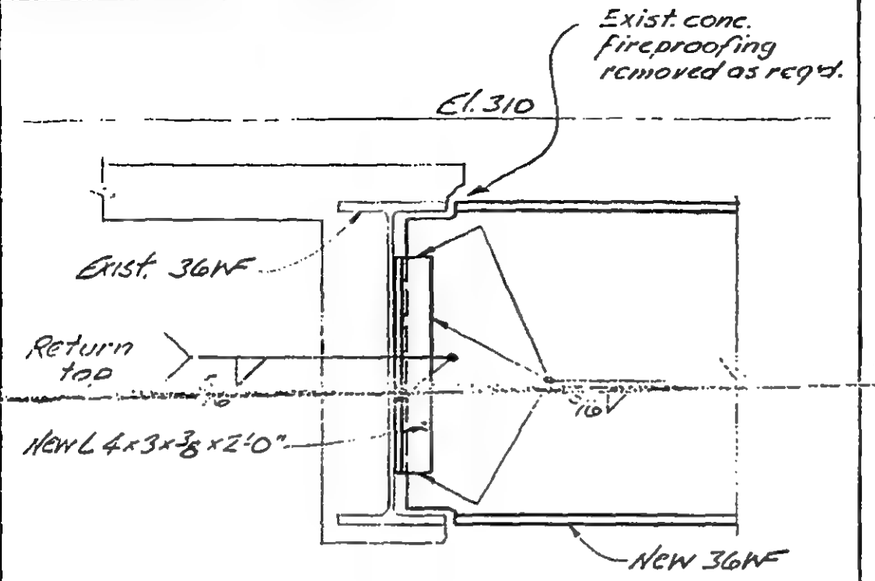

C

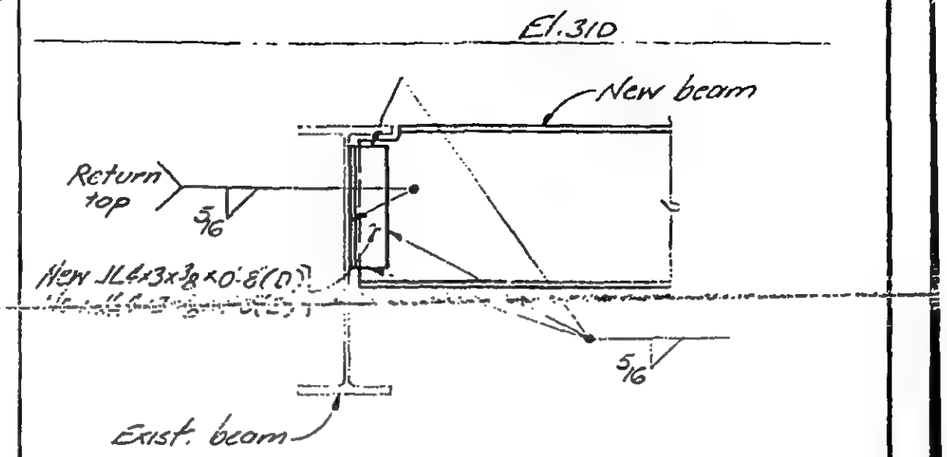

D

E

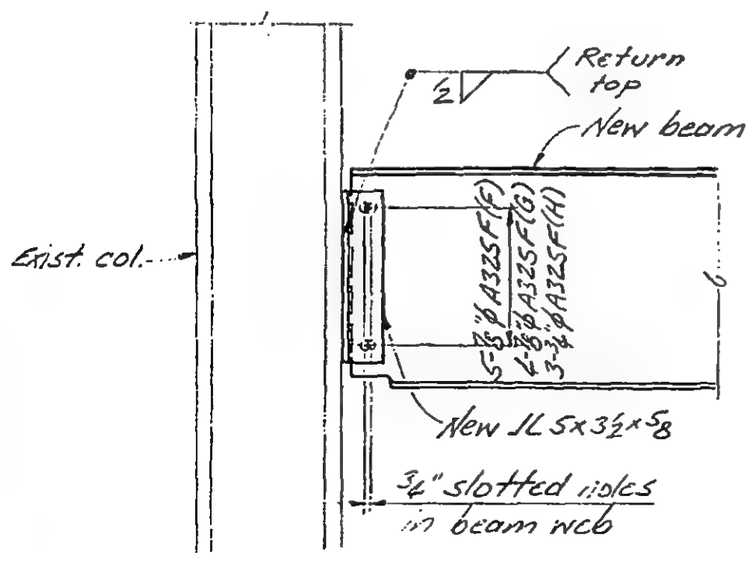

F

G

H

K

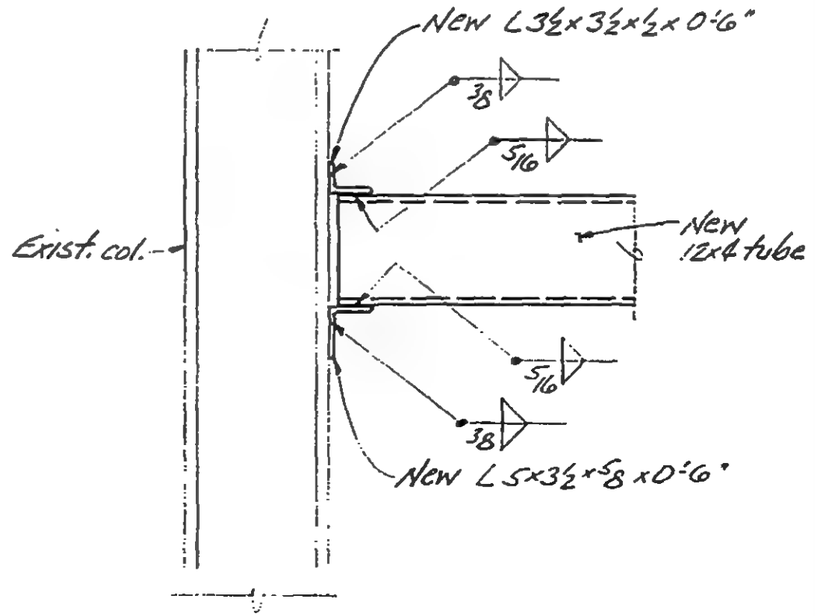

13-K-11.2-4.2

LICENSED PROFESSIONAL ENGINEER — LESLIE E. ROBERTSON — No 34360 — UNIVERSITY OF THE STATE OF NEW YORK

DESIGNED

DRAWN J. A.

REVIEWED WAB

SKILLING, HELLE, CHRISTIANSEN, ROBERTSON — Structural & Civil Engineers

PROJECT: THE WORLD TRADE CENTER | TITLE: EL 310 - ZONE K1 - NEW OPENINGS - CONN. DETAILS | DATE: 5-7-73

REVISIONS

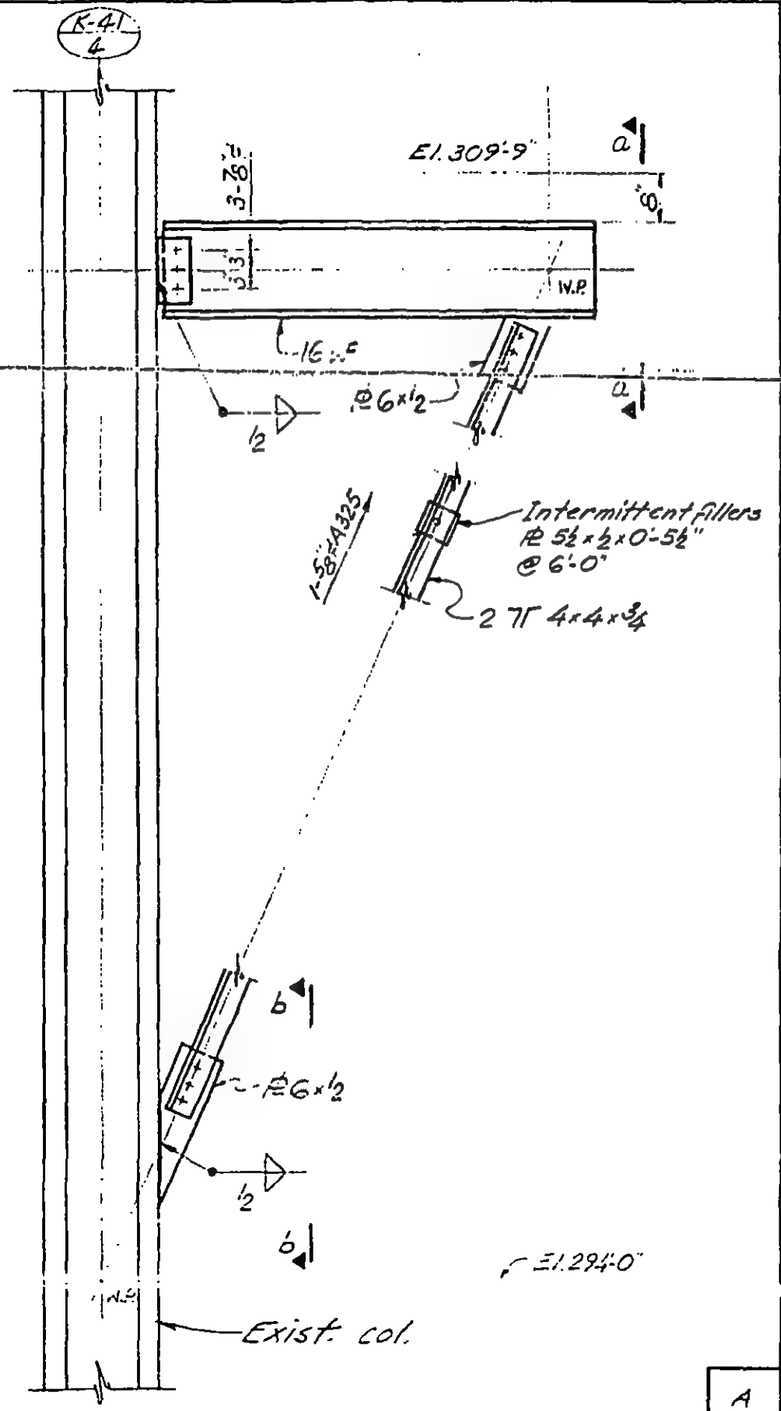

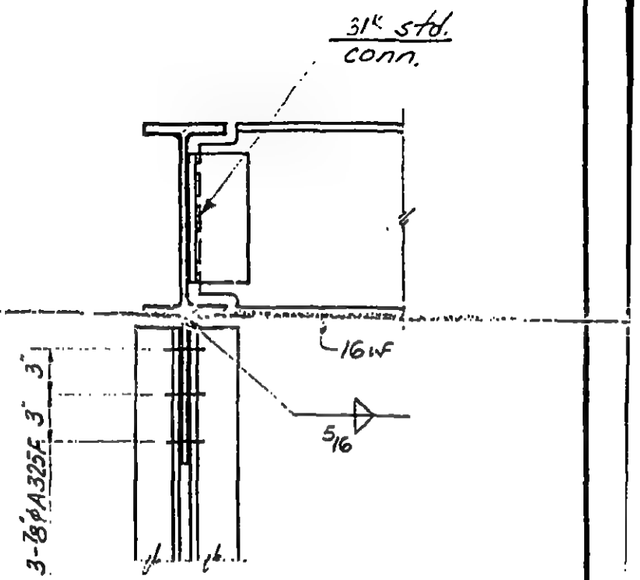

a

b

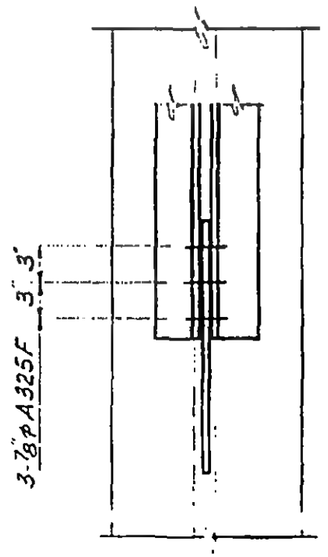

LICENSED PROFESSIONAL ENGINEER — LESLIE E. ROBERTSON — No 34360 — UNIVERSITY OF THE STATE OF NEW YORK

DESIGNED

DRAWN

REVIEWED WAB

A

13-K11.1-5.1

SKILLING, HELLE, CHRISTIANSEN, ROBERTSON — Structural & Civil Engineers

PROJECT: THE WORLD TRADE CENTER

TITLE: EL. 310-ZONE K5-STAIR K6A - CONN. DETAIL

DATE: 5-7-73

REVISIONS

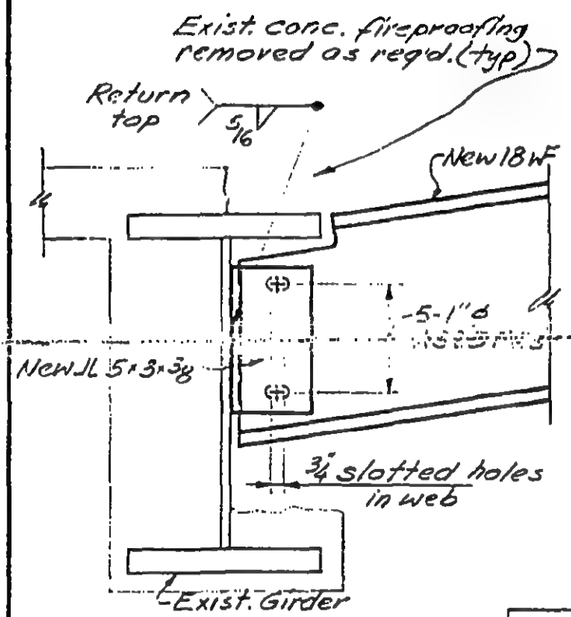

A

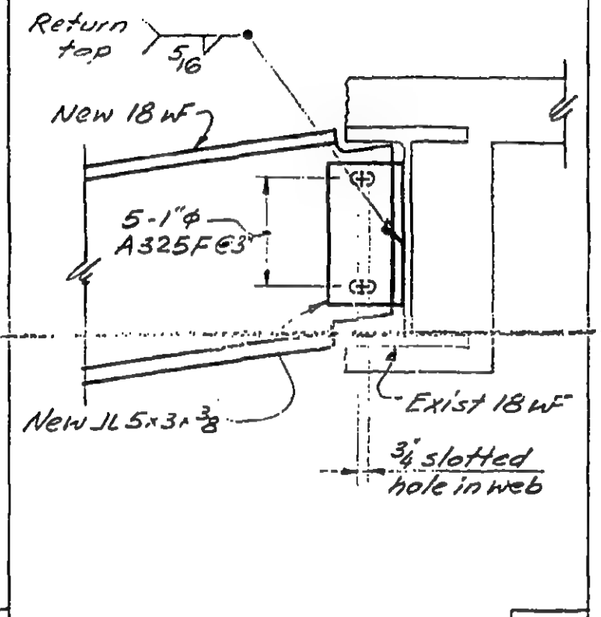

B

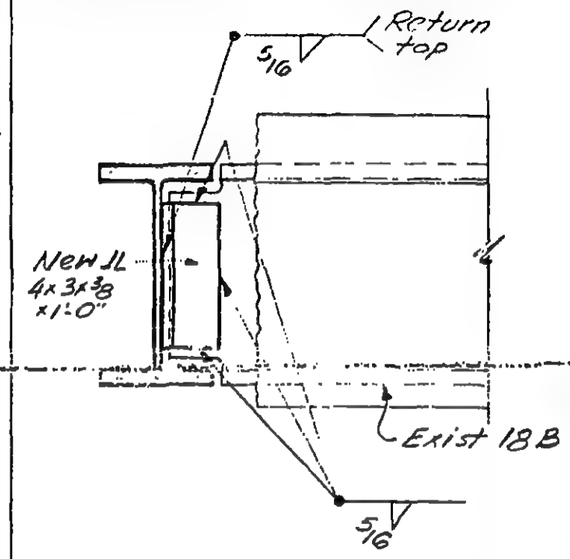

C

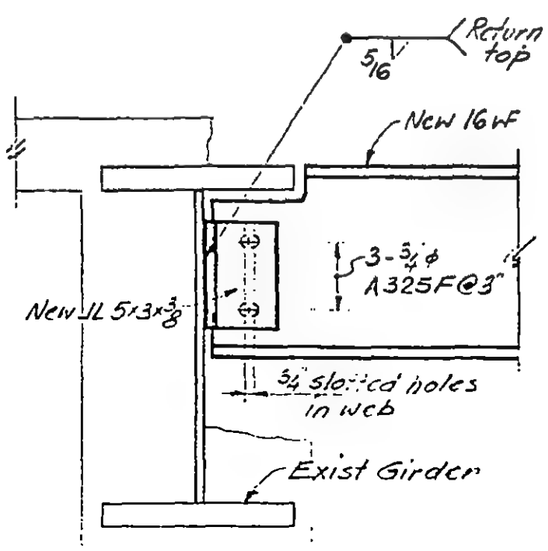

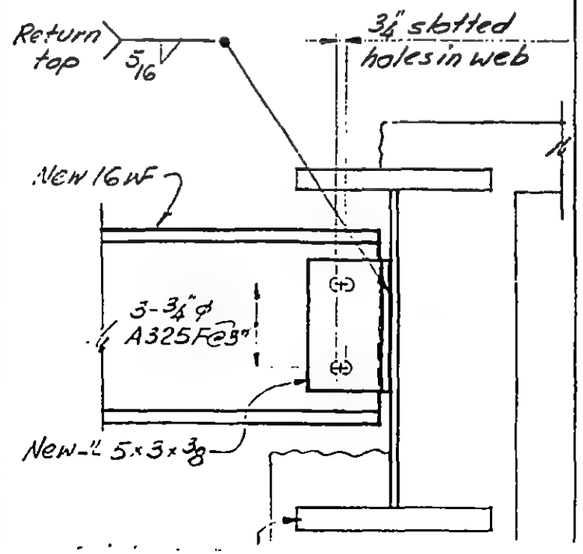

LICENSED PROFESSIONAL ENGINEER
LESLIE E. ROBERTSON
No 34360
UNIVERSITY OF THE STATE OF NEW YORK

DESIGNED

SKILLING, HELLE, CHRISTIANSEN, ROBERTSON — Structural & Civil Engineers

PROJECT: THE WORLD TRADE CENTER | TITLE: EL. 310 - ZONE K1 - NEW OPENINGS CONN. DETAILS | DATE: 5-7-73

REVISIONS

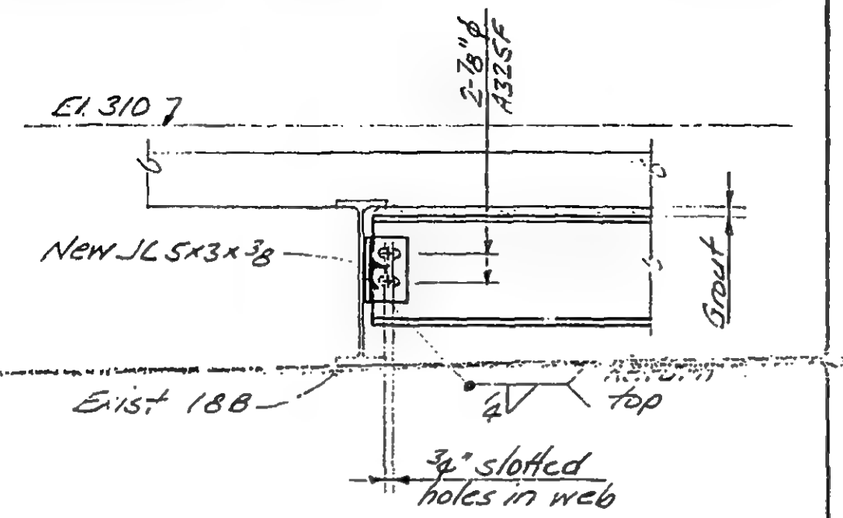

C

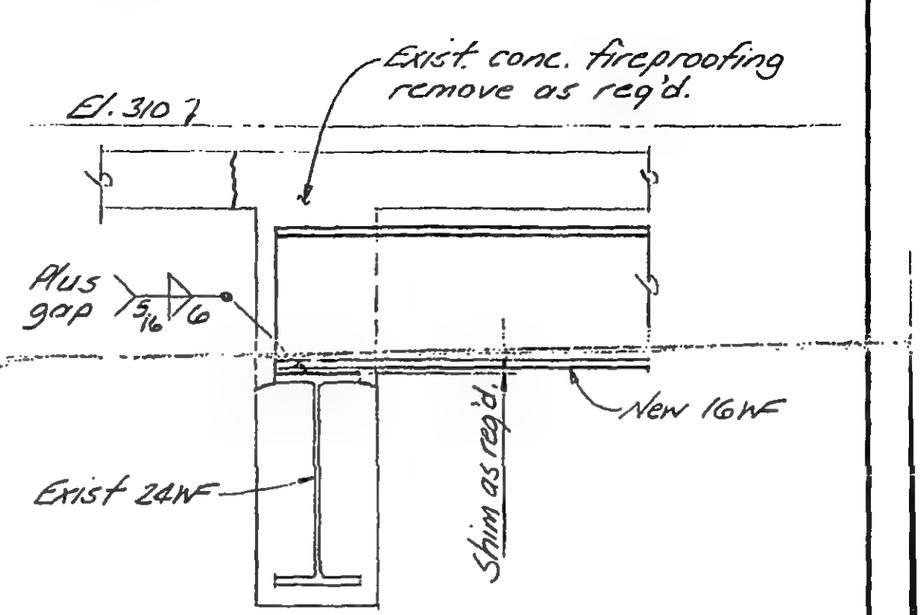

D

LICENSED PROFESSIONAL ENGINEER — LESLIE E. ROBERTSON — NO 34360 — UNIVERSITY OF THE STATE OF NEW YORK

DESIGNED

DRAWN JA

REVIEWED WAB

13-K11.1-5.2

SKILLING, HELLE, CHRISTIANSEN, ROBERTSON — Structural & Civil Engineers

PROJECT: THE WORLD TRADE CENTER | TITLE: EL. 310 - ZONE K5-STAIR 8-CONN. DETAIL | DATE: 5-7-73

REVISIONS

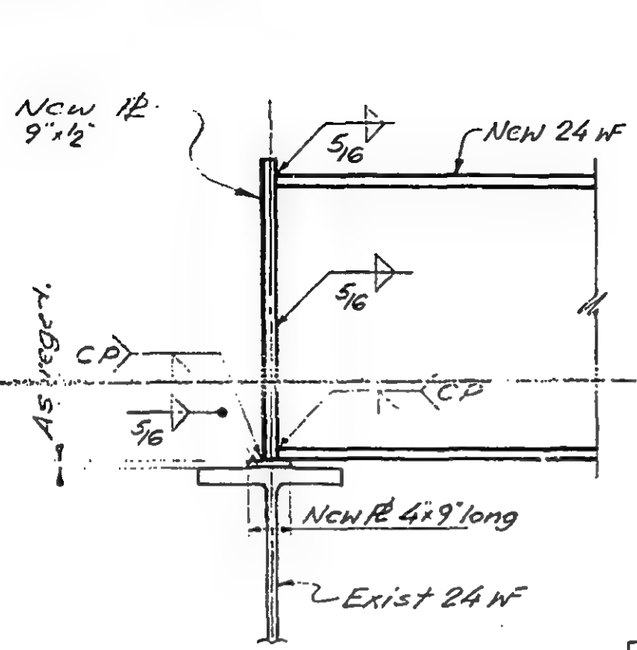

A

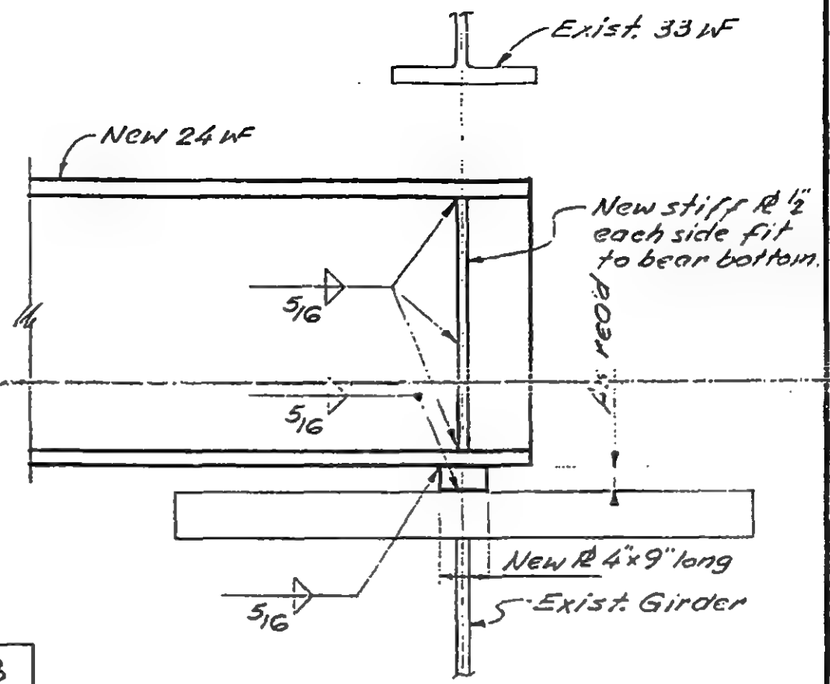

B

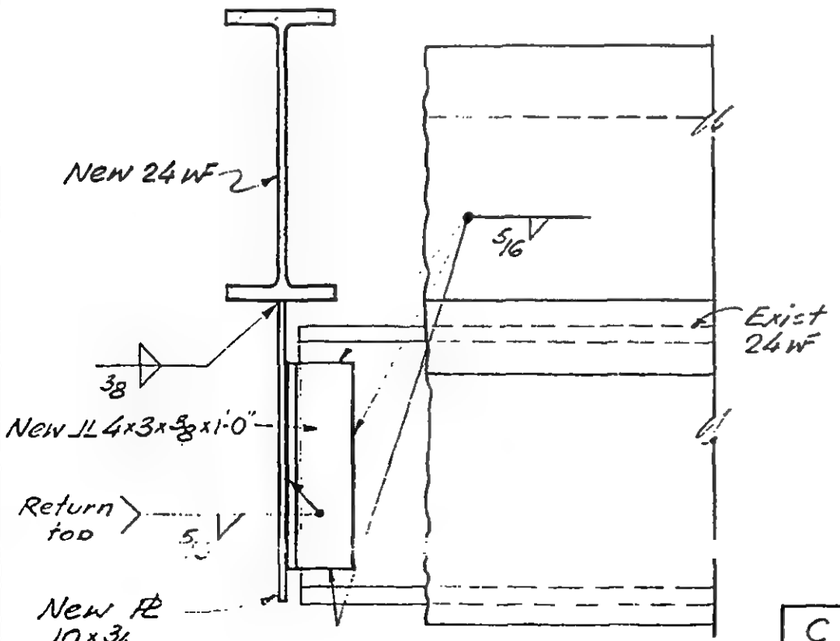

C

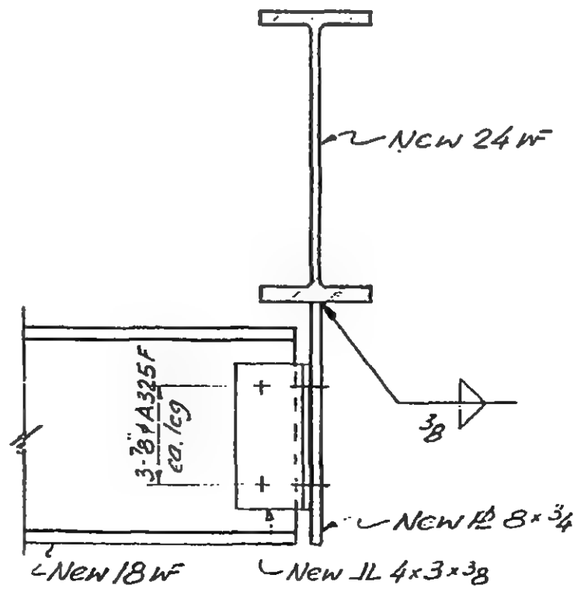

D

LICENSED PROFESSIONAL ENGINEER — LESLIE E. ROBERTSON — No 34360 — UNIVERSITY OF THE STATE OF NEW YORK

DESIGNED

DRAWN John Princeton

REVIEWED

13-K11.2-2.1

SKILLING, HELLE, CHRISTIANSEN, ROBERTSON — Structural & Civil Engineers

PROJECT: THE WORLD TRADE CENTER | TITLE: EL 310 - ZONE K5 - STAIR 8 - CONN. DET. | DATE: 5-7-73

REVISIONS

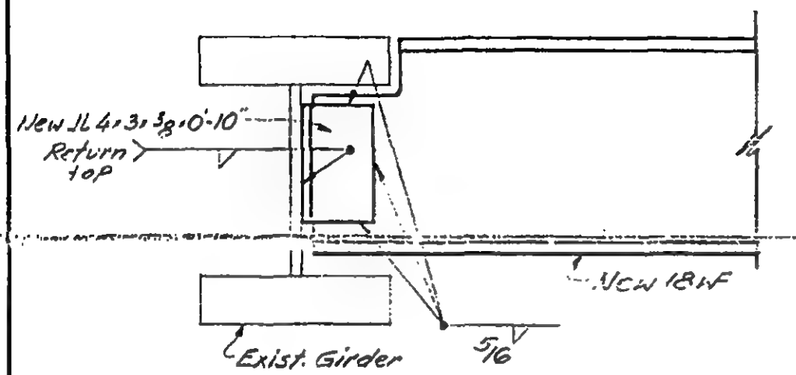

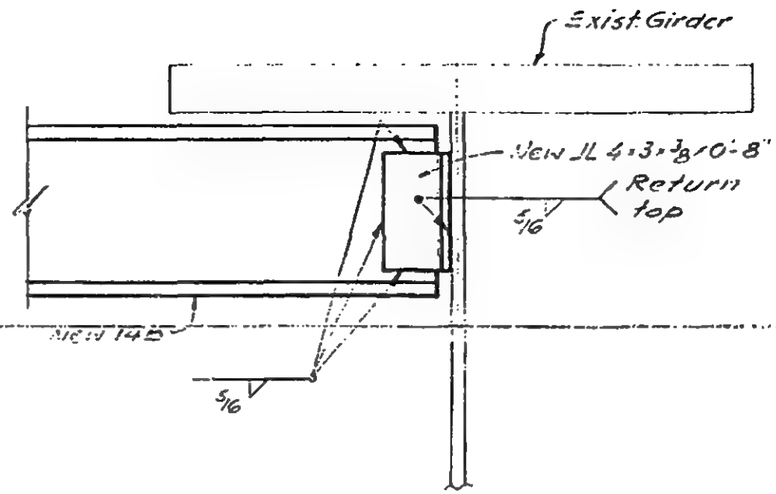

E F

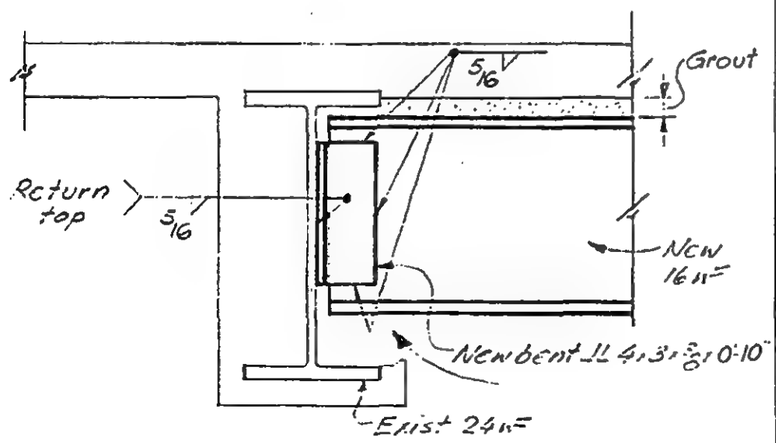

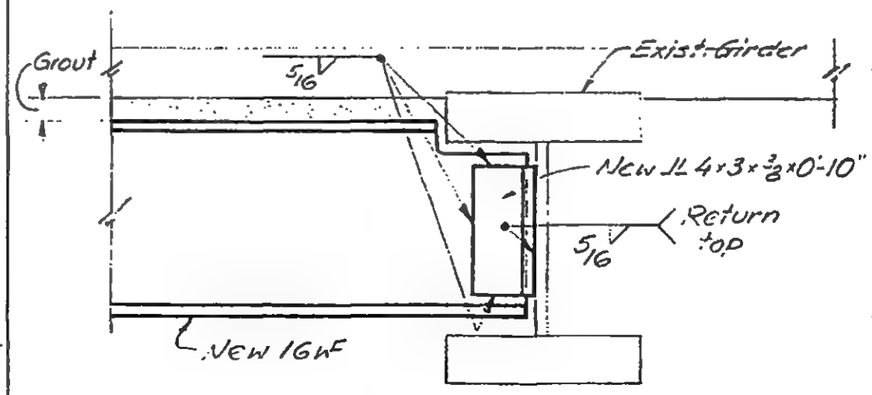

Exist. conc. fireproofing removed as req'd.

G H

LICENSED PROFESSIONAL ENGINEER — LESLIE E. ROBERTSON — No 34360 — UNIVERSITY OF THE STATE OF NEW YORK

DESIGNED

DRAWN John Gricevich

REVIEWED Wab

13-K11.2-2.2

SKILLING, HELLE, CHRISTIANSEN, ROBERTSON — Structural & Civil Engineers

PROJECT THE WORLD TRADE CENTER | TITLE EL 310 - ZONE K5 - STAIR 8 - CONN. DETAILS | DATE 5-7-73

REVISIONS

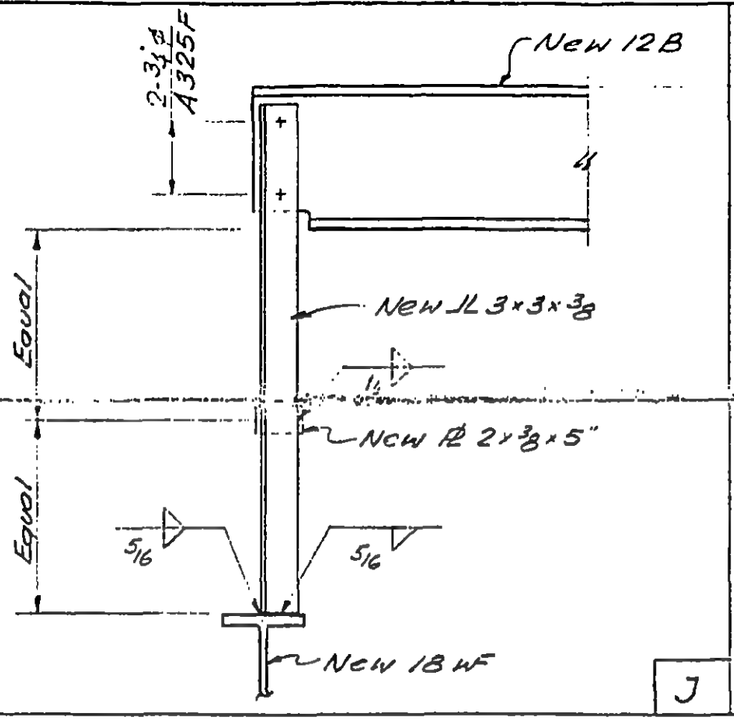

J

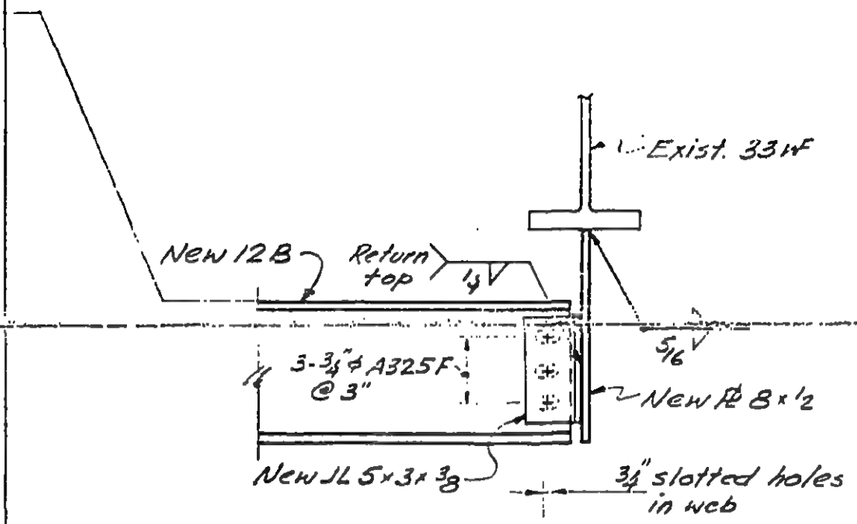

K

LICENSED PROFESSIONAL ENGINEER
LESLIE E. ROBERTSON
No 34360
UNIVERSITY OF THE STATE OF NEW YORK

DESIGNED

DRAWN

REVIEWED WDaB

13-K11.2-2.3

SKILLING, HELLE, CHRISTIANSEN, ROBERTSON — Structural & Civil Engineers

PROJECT: 7 WORLD TRADE CENTER

TITLE: EL. 310 ZONE K3 & K5 - FIRE DAMAGE - CONN. DETAILS

DATE: 5-7-73

REVISIONS

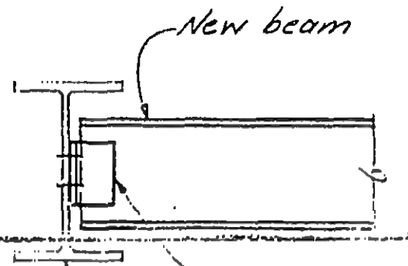

A

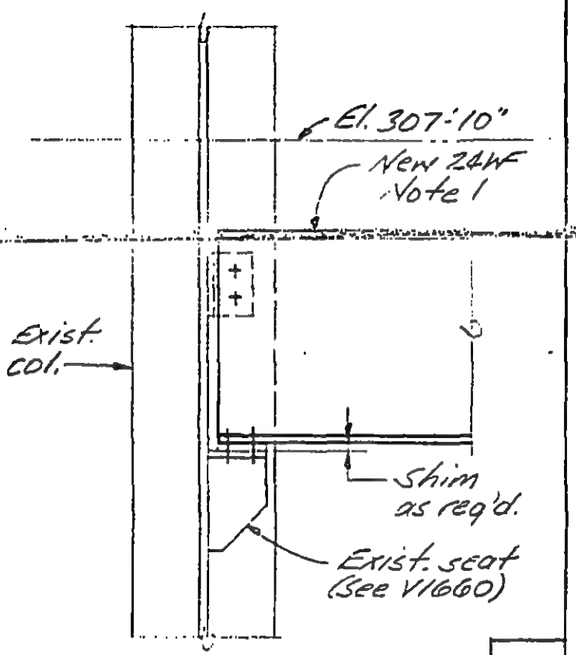

B

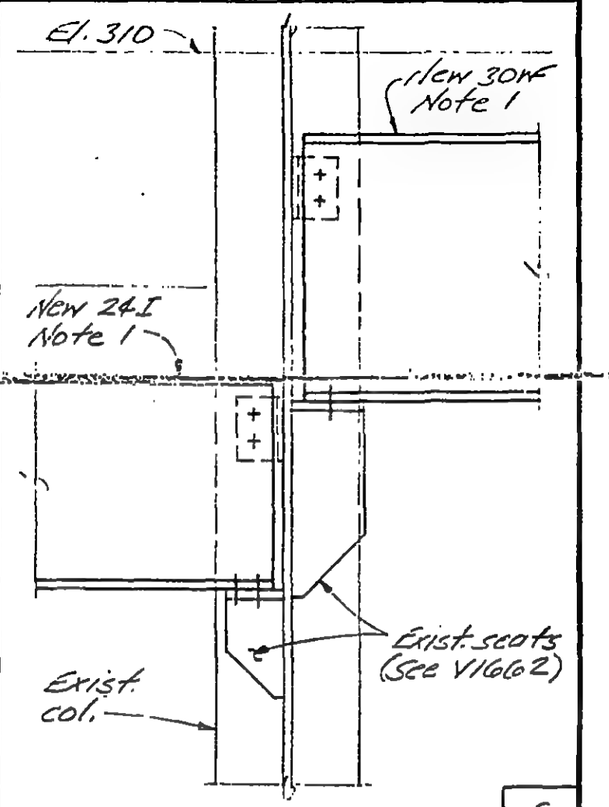

C

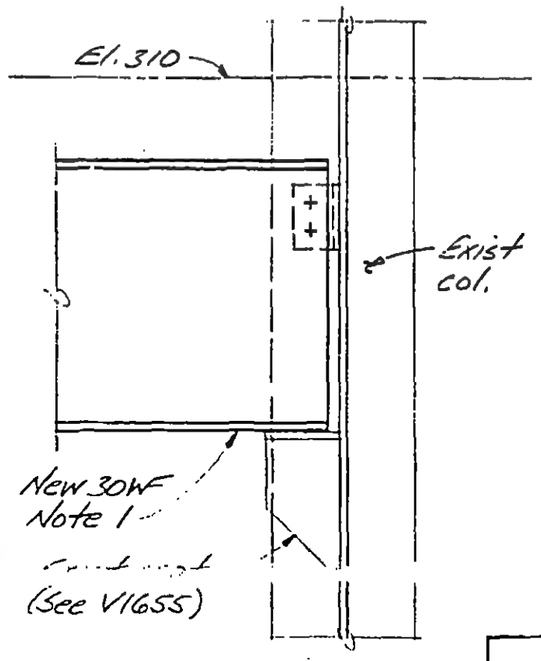

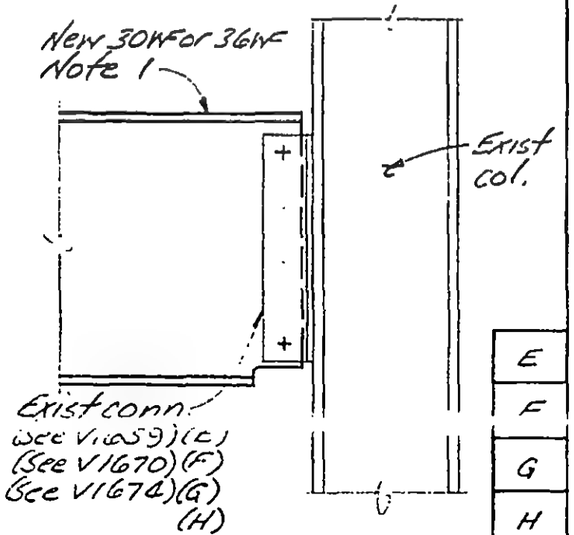

E
F
G
H

Notes:
1. Fabricate new beams to match exist. conn.

LICENSED PROFESSIONAL ENGINEER
LESLIE E. ROBERTSON
No 34360
UNIVERSITY OF THE STATE OF NEW YORK

DESIGNED

DRAWN J. G.

REVIEWED WAB

13-K11.3-1

SKILLING, HELLE, CHRISTIANSEN, ROBERTSON — Structural & Civil Engineers

PROJECT: THE WORLD TRADE CENTER | TITLE: EL. 310 - ZONE K-5 - HANGER DETAILS. | DATE: 5-7-73

REVISIONS

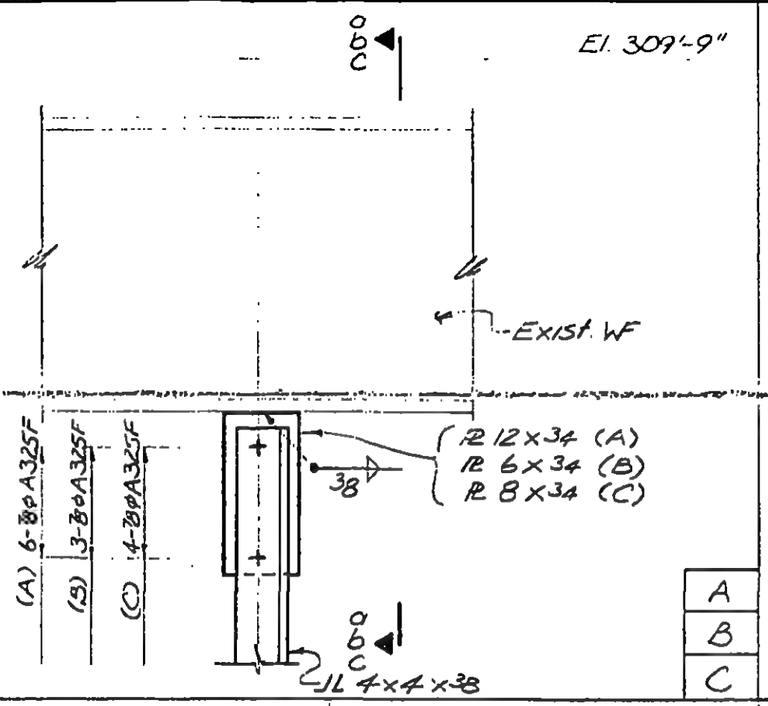

A
B
C

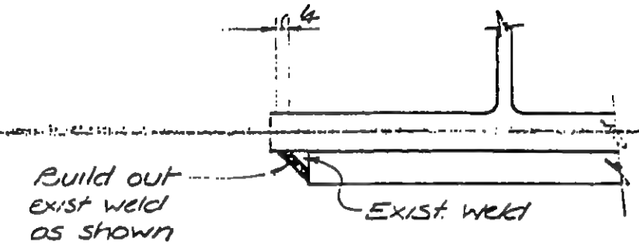

aa

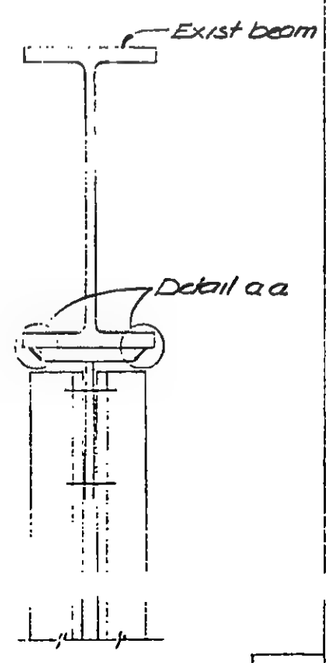

a

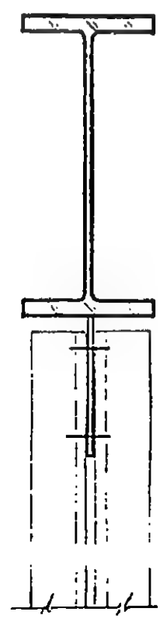

b

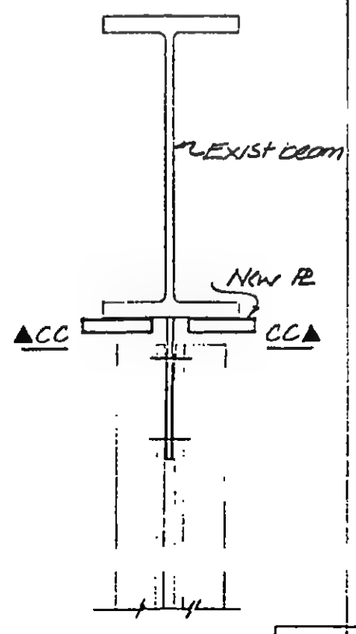

C CC

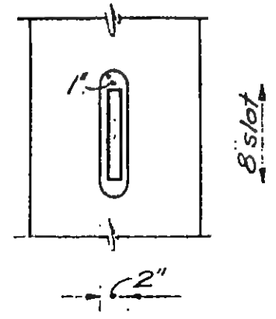

13-K11.4-1

DESIGNED

DRAWN J.G.

REVIEWED WOB

SKILLING, HELLE, CHRISTIANSEN, ROBERTSON — Structural & Civil Engineers

PROJECT THE WORLD TRADE CENTER | TITLE EL 310 - ZONE K5 - ESC. H3 & 4 - CONN. DETAILS | DATE 5-7-73

REVISIONS

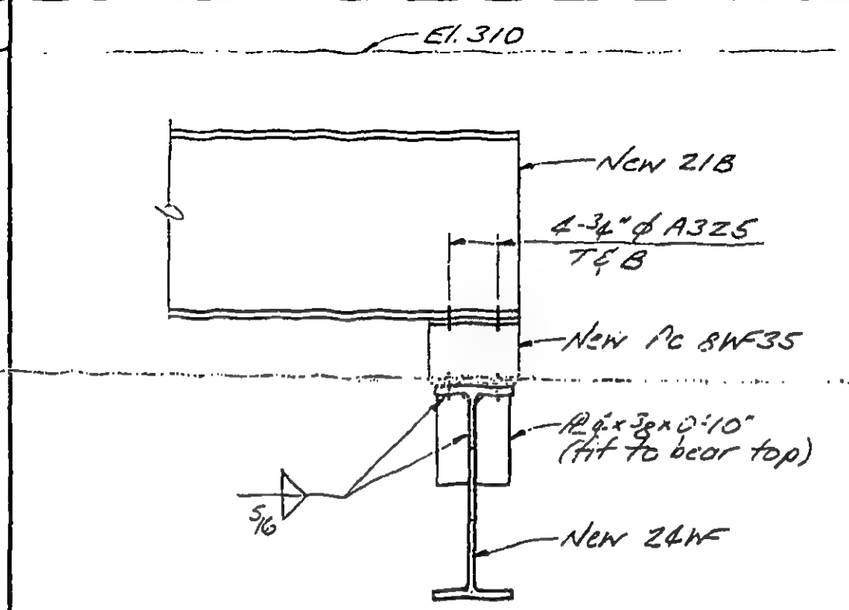

A

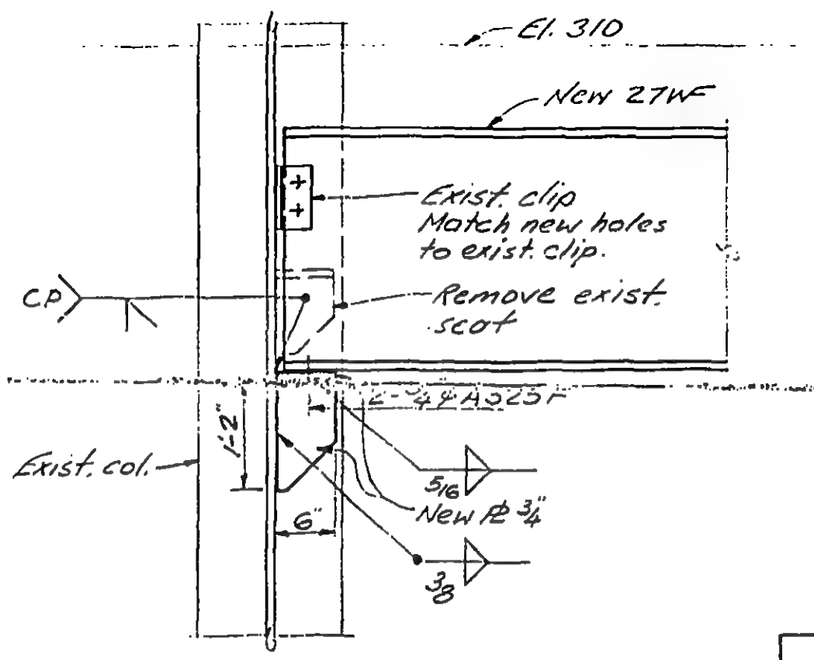

B

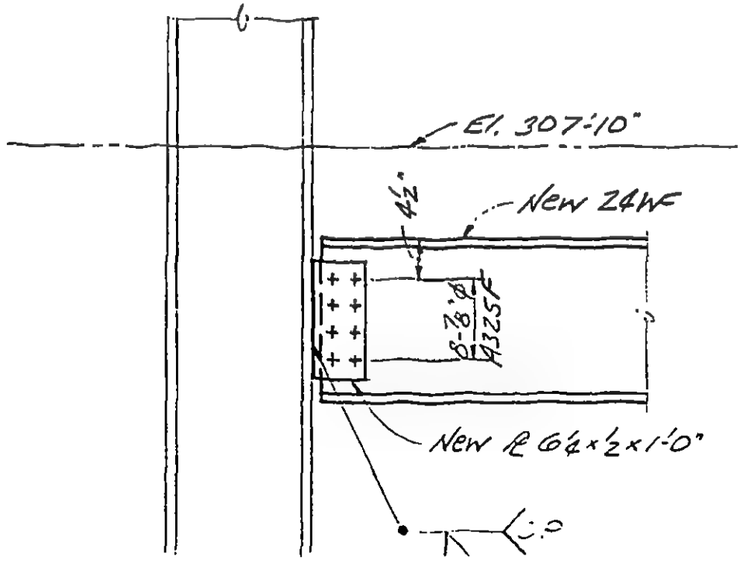

C

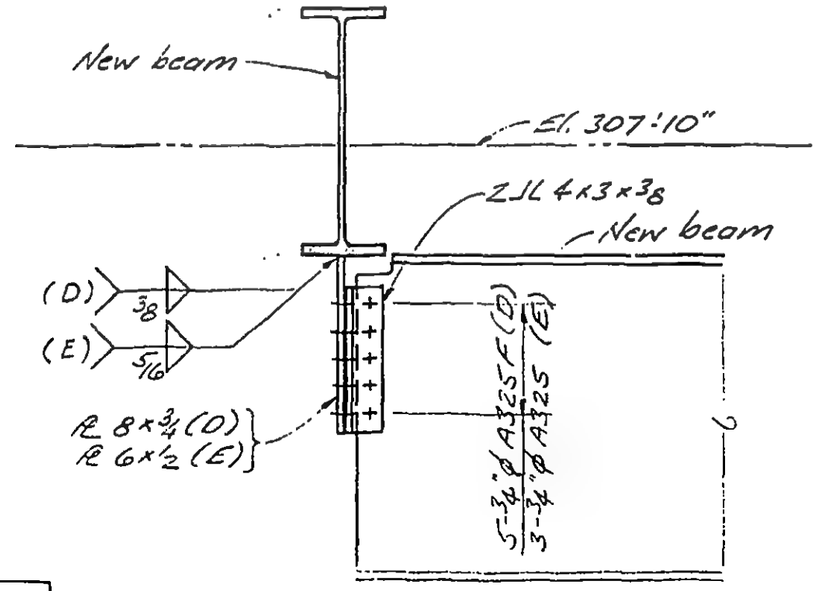

D

E

LICENSED PROFESSIONAL ENGINEER — LESLIE E. ROBERTSON — No 34380 — UNIVERSITY OF THE STATE OF NEW YORK

DESIGNED KC

DRAWN JA

REVIEWED WAB

13-K11.2-5.1

SKILLING, HELLE, CHRISTIANSEN, ROBERTSON — Structural & Civil Engineers

PROJECT: THE WORLD TRADE CENTER

TITLE: EL 310 ZONE K5 ESC. H3 & 4 CONN. DETAIL

DATE: 5-7-73

REVISIONS

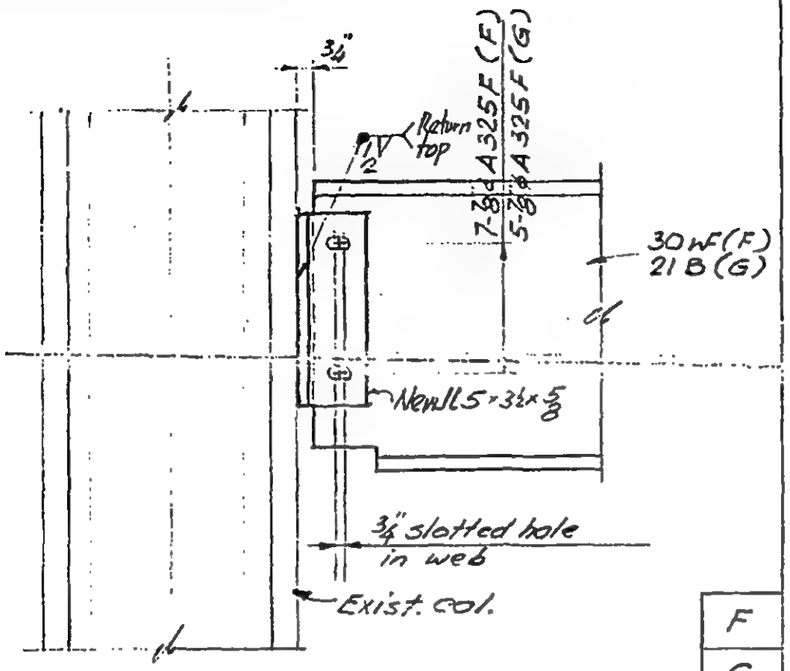

F
G

LICENSED PROFESSIONAL ENGINEER
LESLIE E. ROBERTSON
No 34360
UNIVERSITY OF THE STATE OF NEW YORK

DESIGNED

DRAWN John Francis

REVIEWED DRB

13-K11.2-5.2

SKILLING, HELLE, CHRISTIANSEN, ROBERTSON — Structural & Civil Engineers

PROJECT: THE WORLD TRADE CENTER

TITLE: EL. 310 K3 & K5 - FIRE DAMAGE-CONN. DETAILS

DATE: 5-7-73

REVISIONS

A

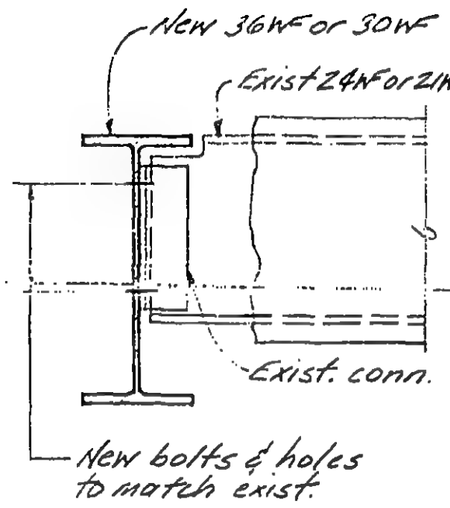

B

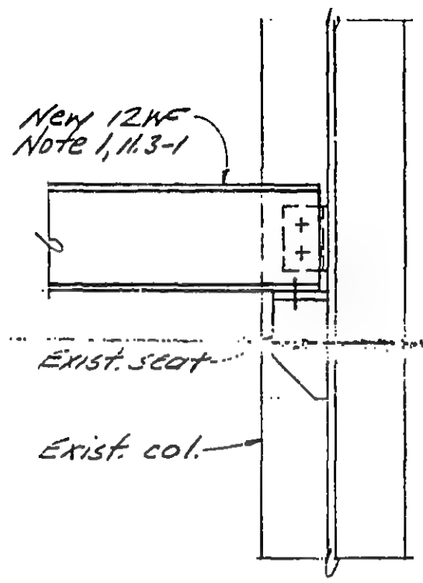

C

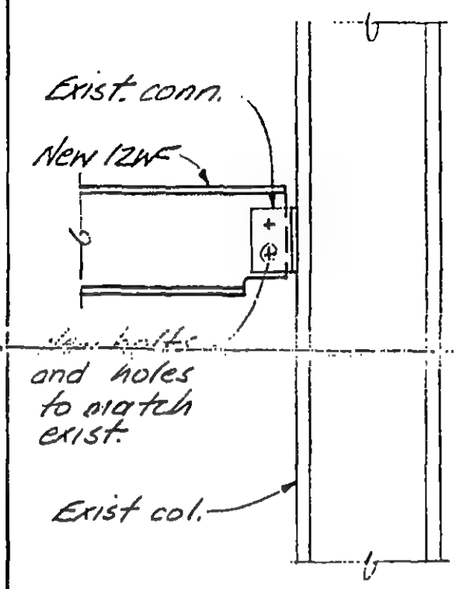

D

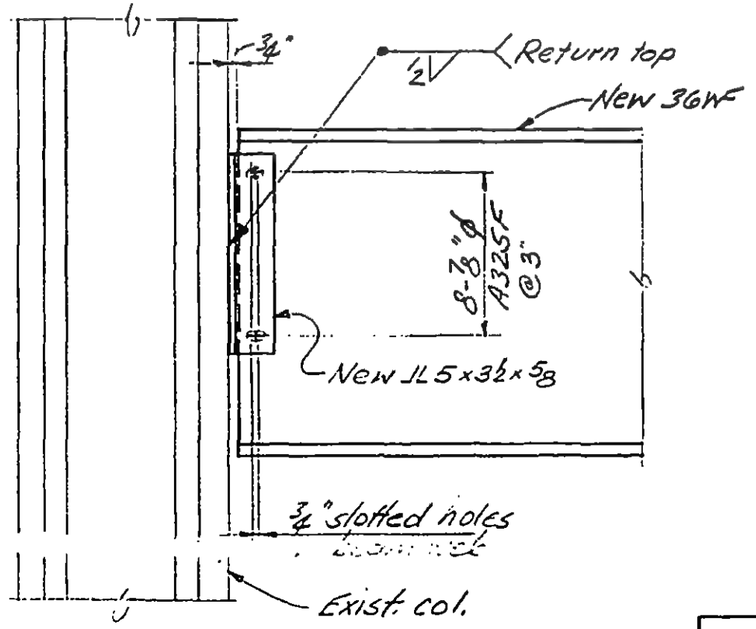

E

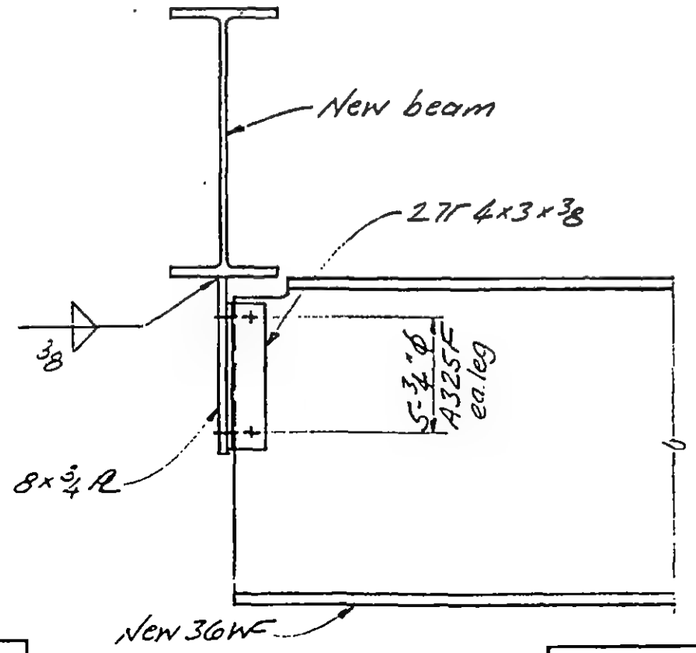

LICENSED PROFESSIONAL ENGINEER — LESLIE E. ROBERTSON — No 34360 — UNIVERSITY OF THE STATE OF NEW YORK

DESIGNED: LC

DRAWN: JA

REVIEWED: WdB

13-K11.3-2

SKILLING, HELLE, CHRISTIANSEN, ROBERTSON — Structural & Civil Engineers

PROJECT THE WORLD TRADE CENTER | TITLE EL. 303'-6"-ZONE K5-MECH. PLATFORM-CONN. DETAILS | DATE 5-7-73

REVISIONS

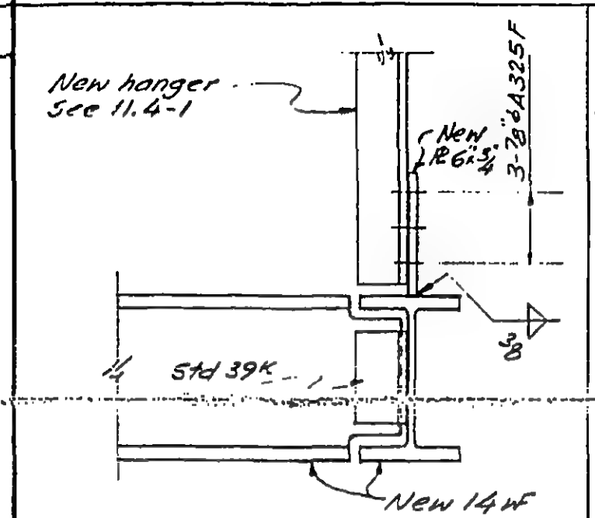

A

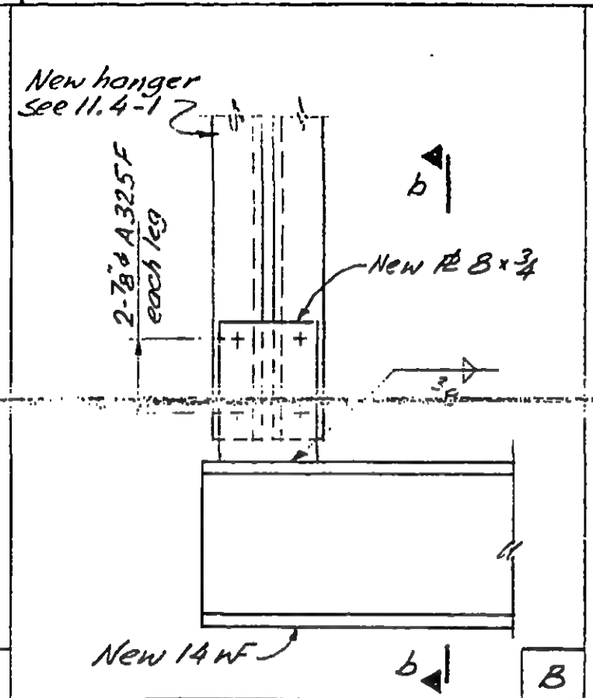

B

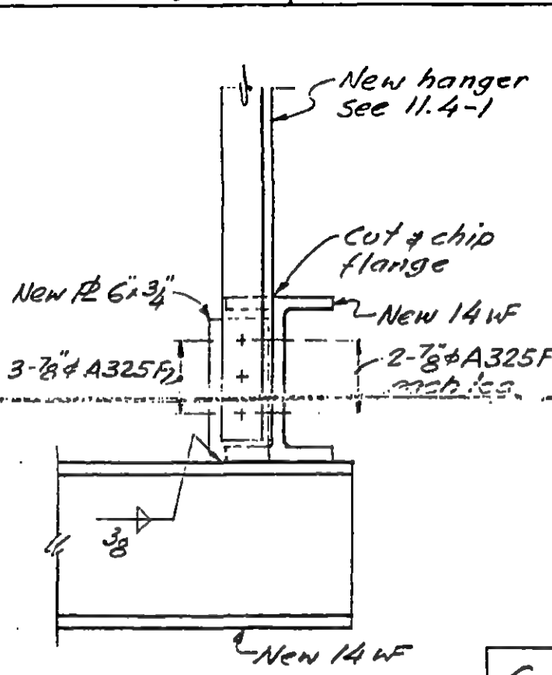

C

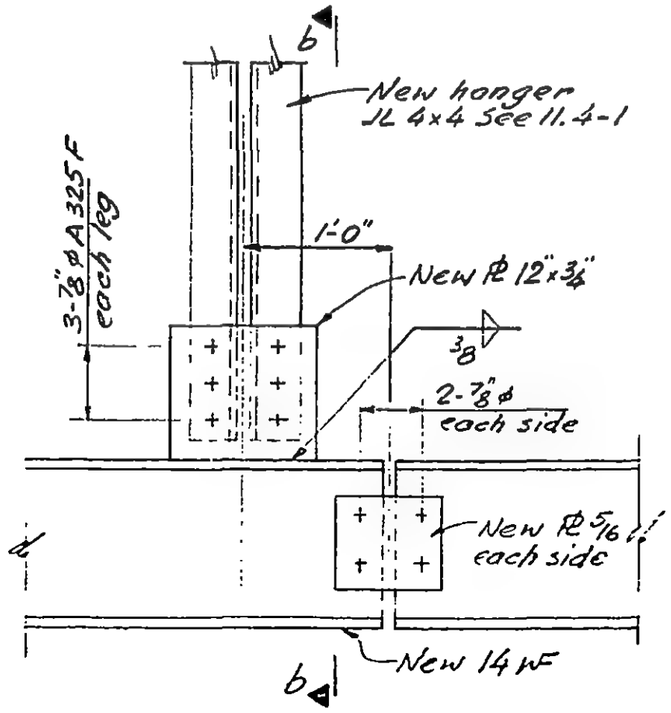

D | b

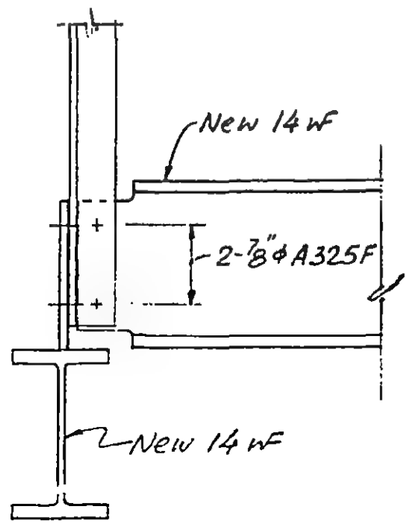

13.11.4-2

LICENSED PROFESSIONAL ENGINEER
LESLIE E. ROBERTSON
No 34360
UNIVERSITY OF THE STATE OF NEW YORK

DESIGNED

DRAWN John Simms

REVIEWED LERB

SKILLING, HELLE, CHRISTIANSEN, ROBERTSON — Structural & Civil Engineers

PROJECT: THE WORLD TRADE CENTER | TITLE: EL. 303-6 ZONE K5 - MECH. PLATFORM + CONN. DETAILS | DATE: 5-7-73

REVISIONS

6-4-73

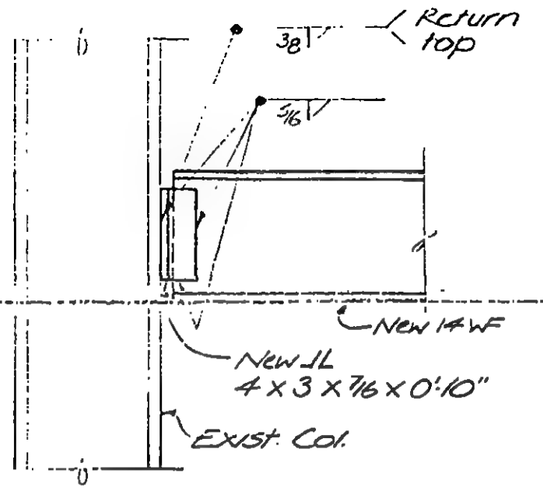

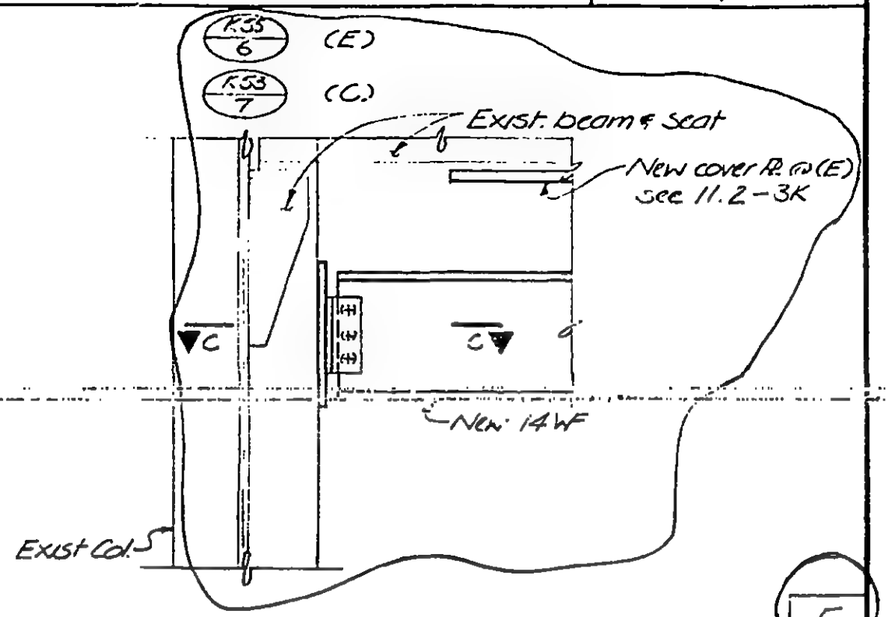

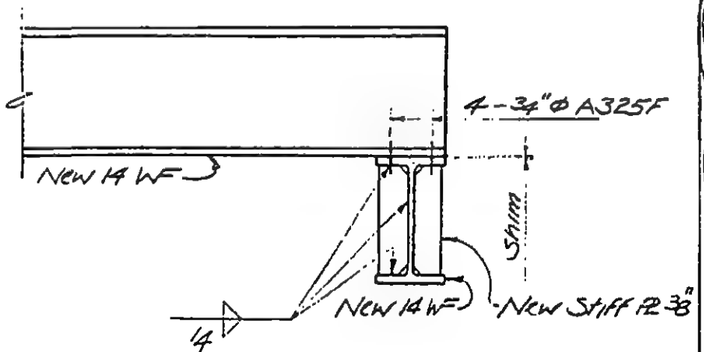

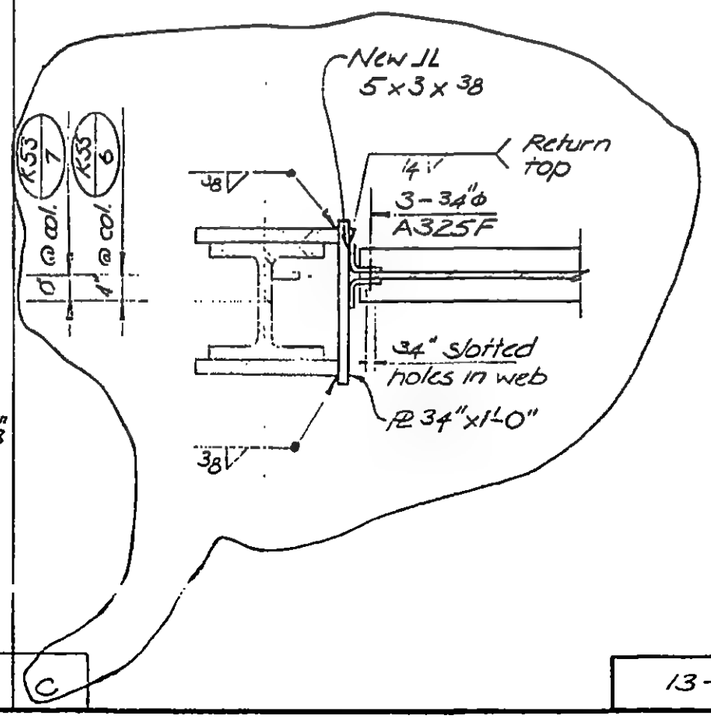

DESIGNED

DRAWN T. Banks.

REVIEWED WOB

13-K11.4-3

SKILLING, HELLE, CHRISTIANSEN, ROBERTSON — Structural & Civil Engineers

PROJECT THE WORLD TRADE CENTER | TITLE EL 320-ZONE K5-MEZZ. LEVEL-CONN. DETAIL | DATE 5-7-73

REVISIONS

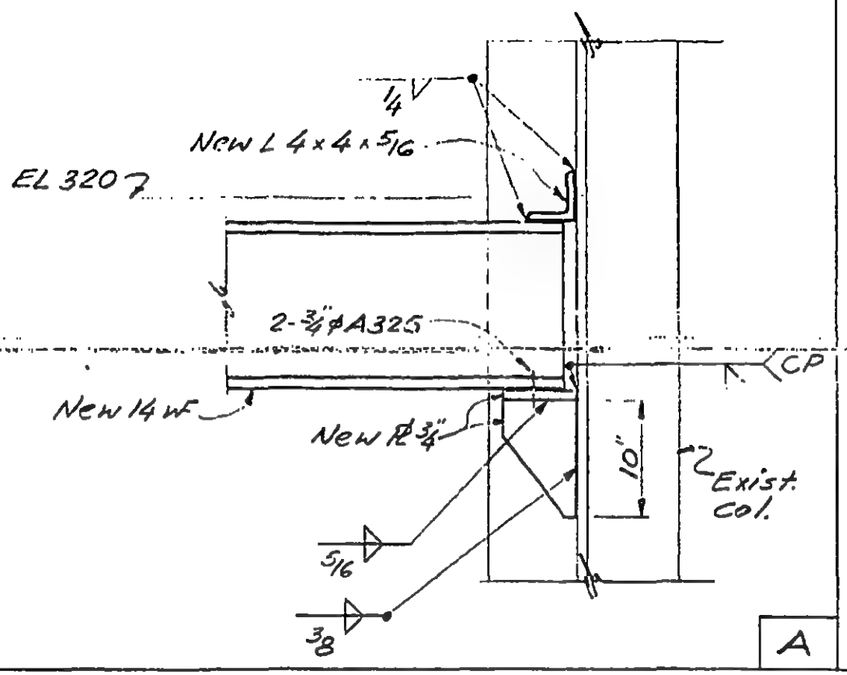

A

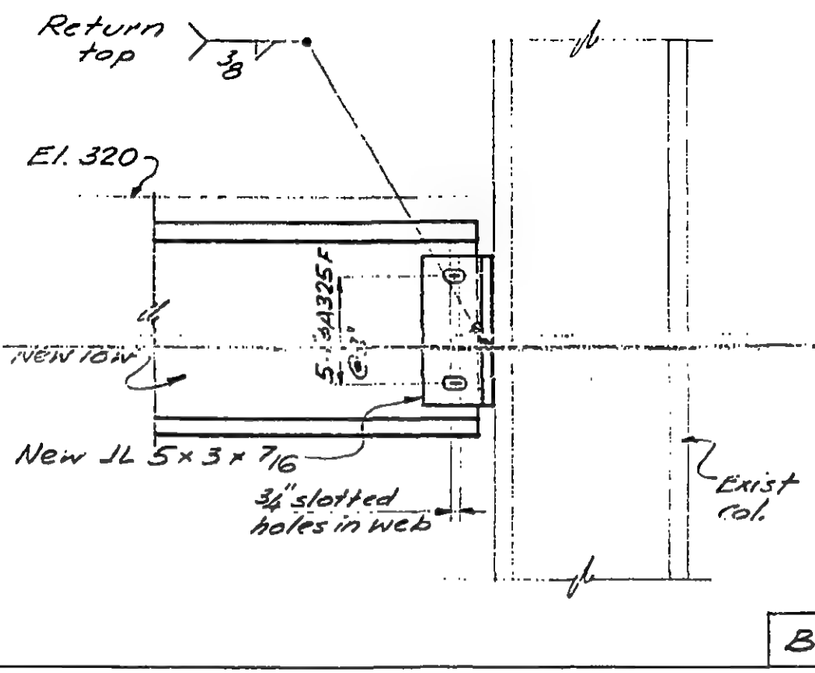

B

LICENSED PROFESSIONAL ENGINEER
LESLIE E. ROBERTSON
No 34360
UNIVERSITY OF THE STATE OF NEW YORK

DESIGNED

DRAWN

REVIEWED

13-K12-1

SKILLING, HELLE, CHRISTIANSEN, ROBERTSON — Structural & Civil Engineers

PROJECT: THE WORLD TRADE CENTER | TITLE: El. 320 - ZONE K3 - HANGERS - CONN DETAILS | DATE: 5-7-73

REVISIONS

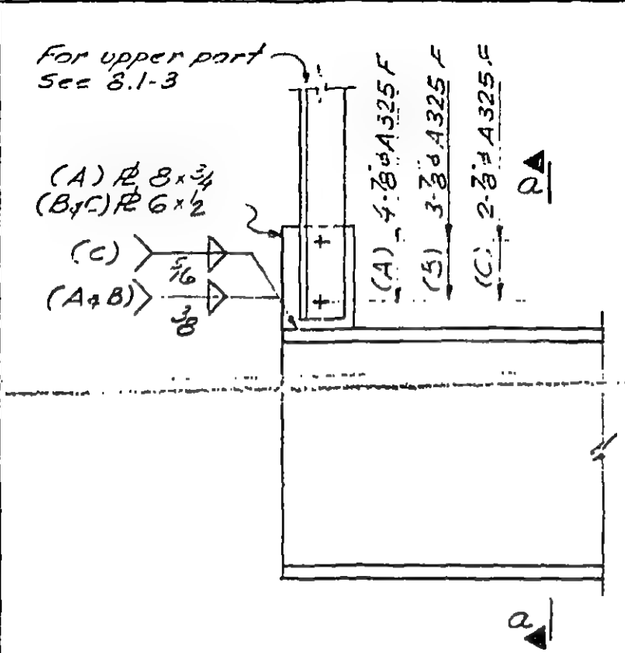

A
B
C

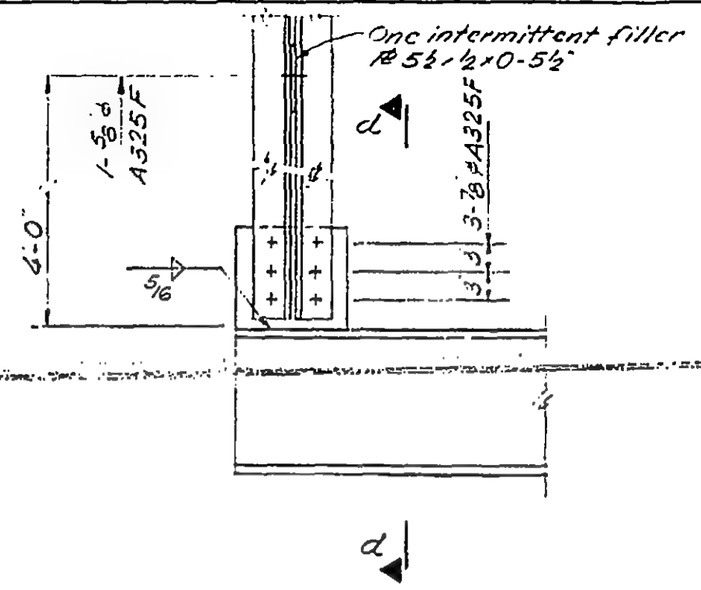

D

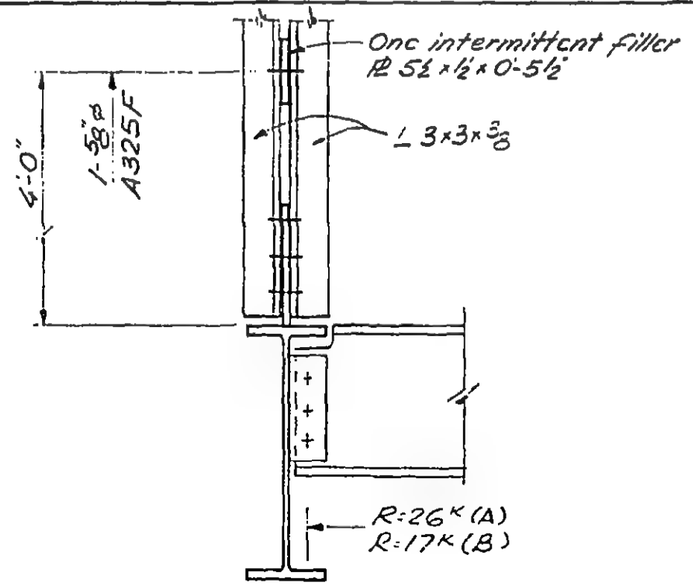

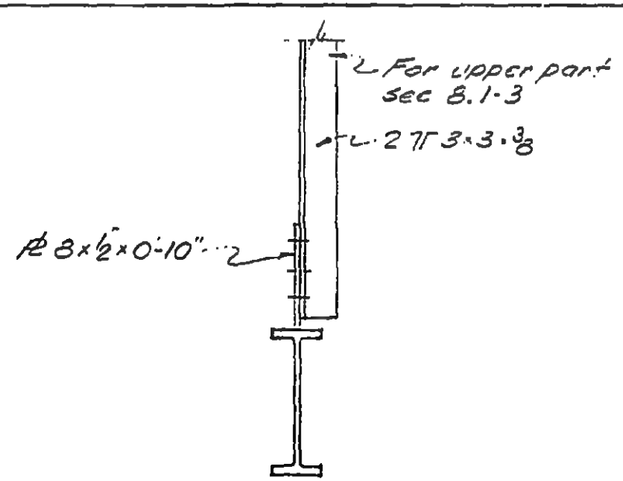

LICENSED PROFESSIONAL ENGINEER
LESLIE E. ROBERTSON
No 34360
UNIVERSITY OF THE STATE OF NEW YORK

DESIGNED
DRAWN
REVIEWED WAB

a | d

13-K12-2

SKILLING, HELLE, CHRISTIANSEN, ROBERTSON — Structural & Civil Engineers

PROJECT THE WORLD TRADE CENTER | TITLE SECTIONS AT AUTO LIFT - EL. 284'-0" | DATE 1-12-73

REVISIONS

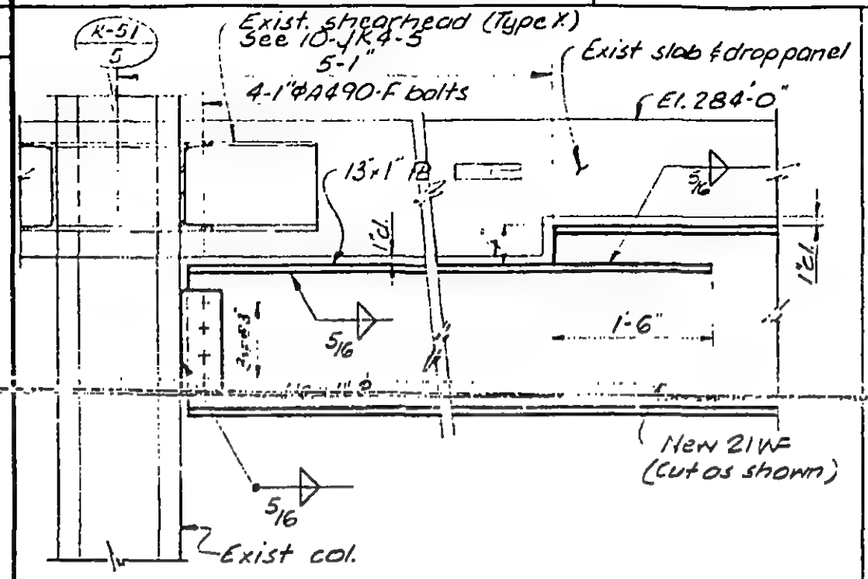

A

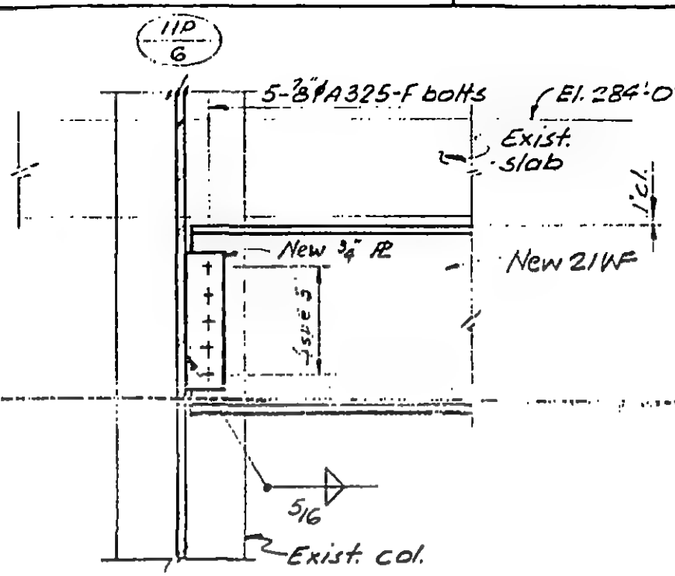

B

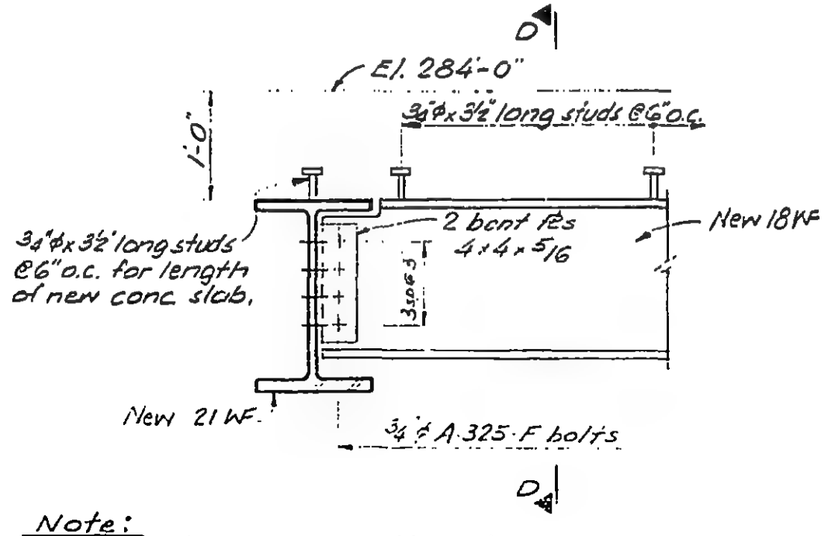

Note:
Shear studs to be omitted if steel beams are installed after conc. slab is in place.

C

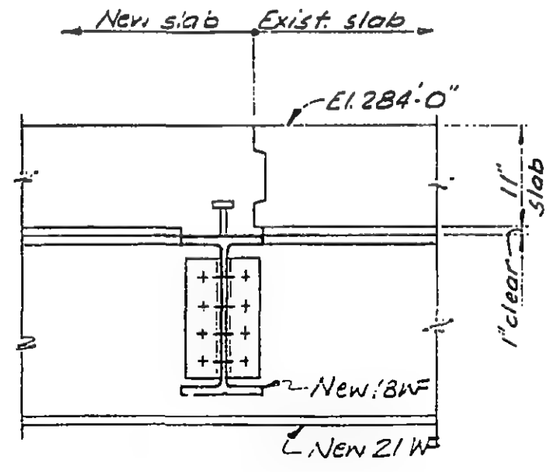

D

LICENSED PROFESSIONAL ENGINEER
LESLIE E. ROBERTSON
No 34360
UNIVERSITY OF THE STATE OF NEW YORK

DESIGNED JS
DRAWN TR
REVIEWED

13-K13-1

SKILLING, HELLE, CHRISTIANSEN, ROBERTSON — Structural & Civil Engineers

PROJECT THE WORLD TRADE CENTER | TITLE SECTIONS AT AUTO LIFT - EL. 284'-0" | DATE 1-12-73

REVISIONS

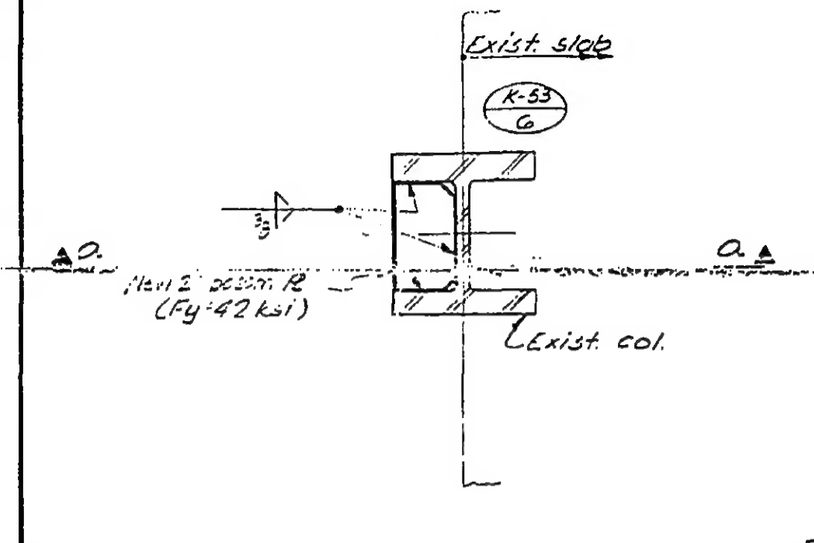

A

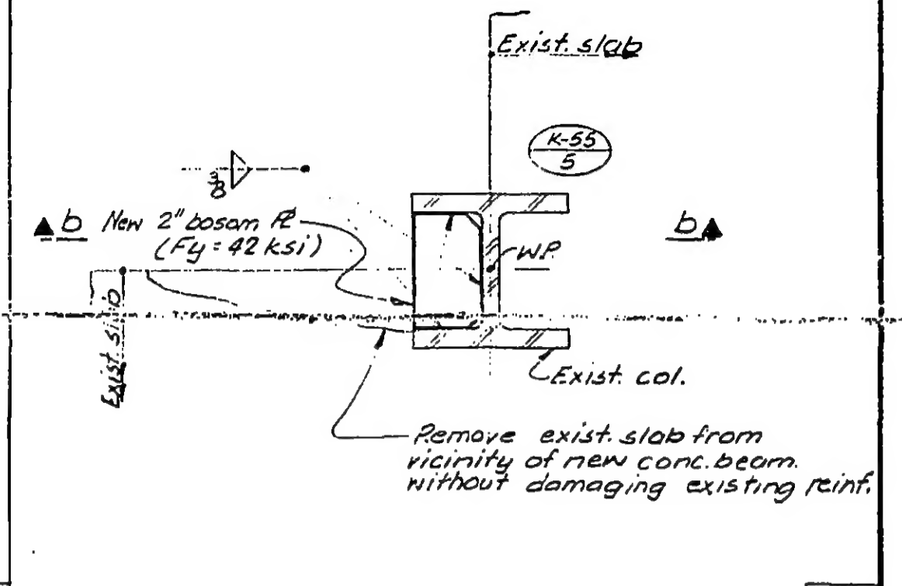

B

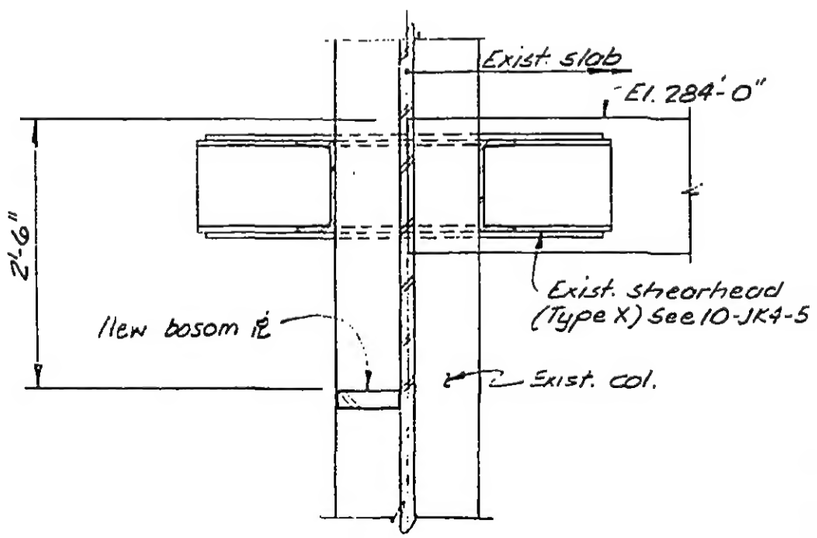

a

b

LICENSED PROFESSIONAL ENGINEER
LESLIE E. ROBERTSON
No 34980
UNIVERSITY OF THE STATE OF NEW YORK

DESIGNED JS

DRAWN TR

REVIEWED

13-K13-2

SKILLING, HELLE, CHRISTIANSEN, ROBERTSON — Structural & Civil Engineers

PROJECT: THE WORLD TRADE CENTER | TITLE: SECTIONS AT AUTO LIFT - EL. 284'-0" | DATE: 1-12-73

REVISIONS

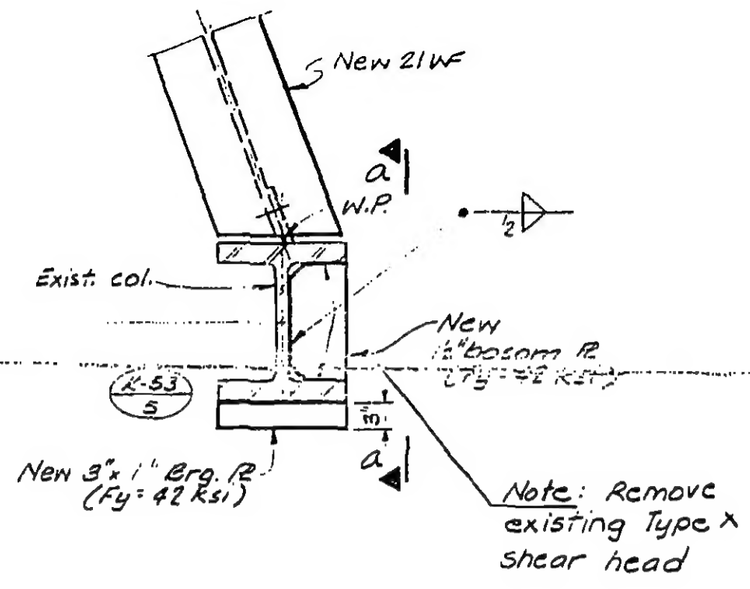

A

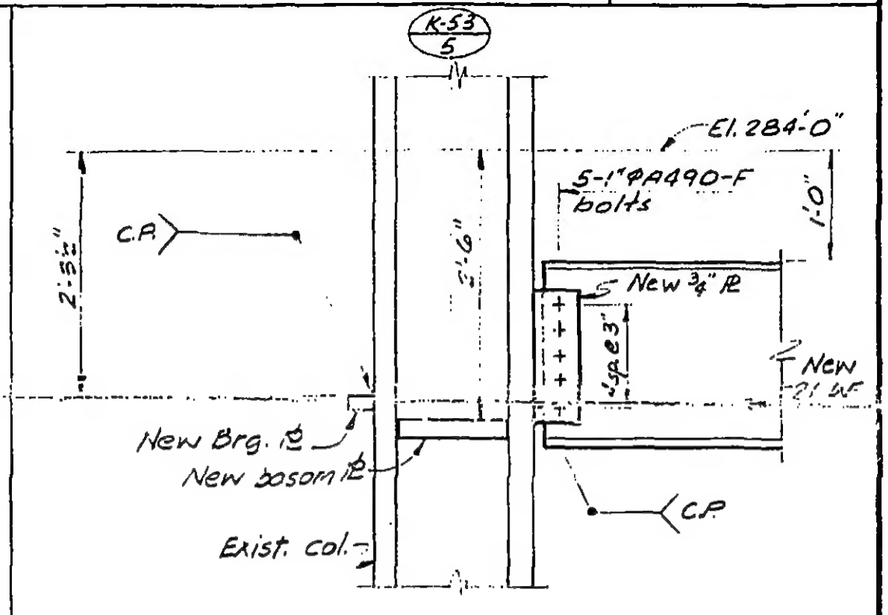

a

13-K13-3

LICENSED PROFESSIONAL ENGINEER
LESLIE E. ROBERTSON
No 34360
UNIVERSITY OF THE STATE OF NEW YORK

DESIGNED D.S.
DRAWN T.R.
REVIEWED

SKILLING, HELLE, CHRISTIANSEN, ROBERTSON — Structural & Civil Engineers

PROJECT THE WORLD TRADE CENTER | TITLE SECTIONS AT AUTO LIFT - EL. 284'-0" | DATE 1-12-73

REVISIONS

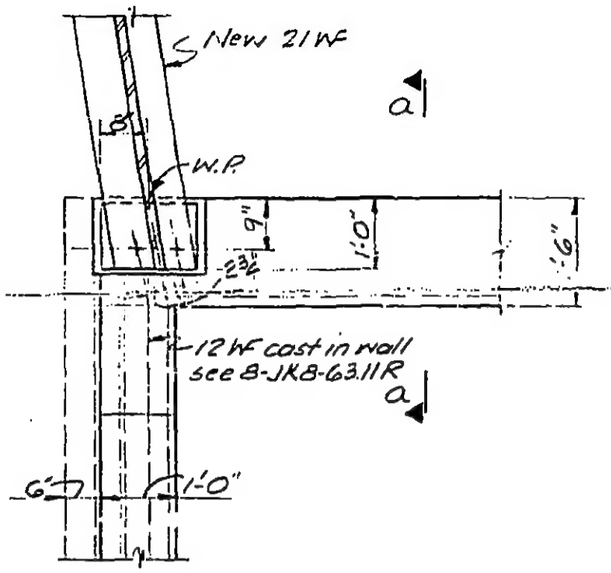

A

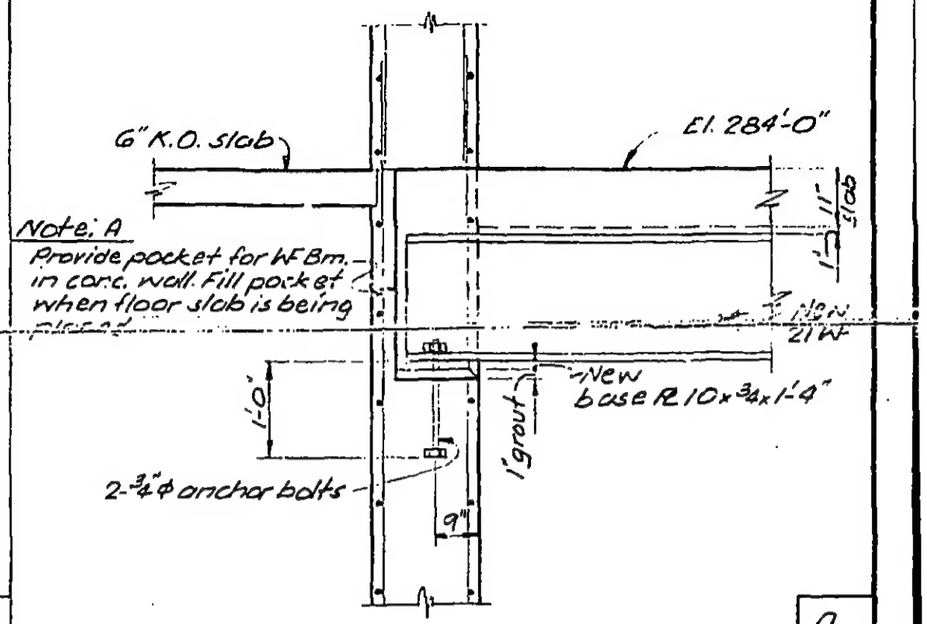

a

LICENSED PROFESSIONAL ENGINEER — LESLIE E. ROBERTSON — No 34360 — UNIVERSITY OF THE STATE OF NEW YORK

DESIGNED JS

DRAWN TR

REVIEWED

13-K13-4